ZF 4HP-22/24 SERIES
DIAGNOSTIC AND VALVE BODY INFORMATION

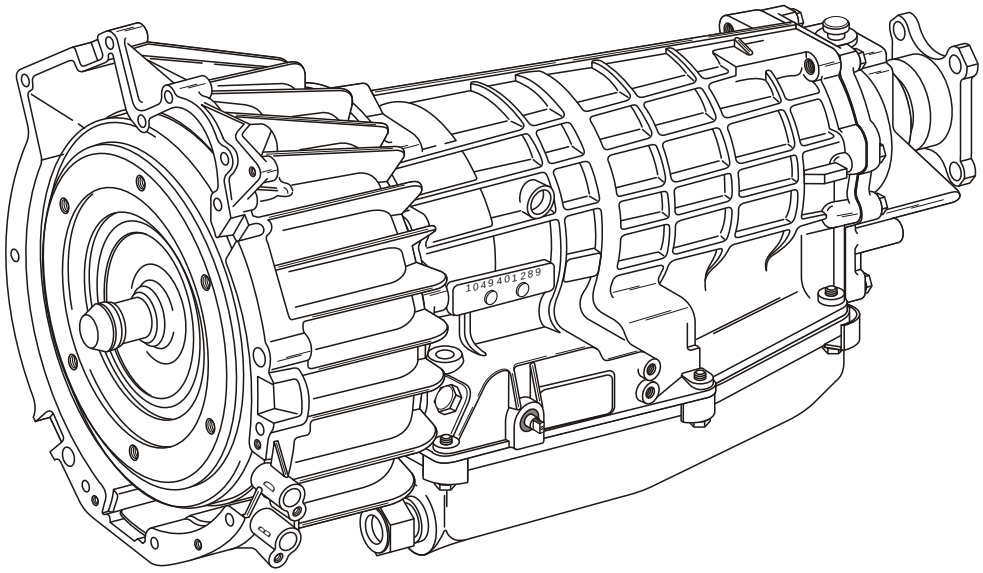

The Electronic Control system was first introduced in 1986 and was incorporated into the totaly hydraulic 4HP-22 unit produced by ZF. It combines the hydraulic control of forward and reverse gear engagement, with electronic control for automatic upshifts from 1st thru 4th and automatic downshifts from 4th thru 1st gears. Three different versions of valve bodies have been used on BMW vehicles, with minor differences between them

The 1st version, ***designated Early "E-7"***, has ***5 solenoids*** on the valve body, was introduced in 1986 and used up thru 1989. This version includes a solenoid for reverse lockout.

The 2nd version, ***designated Late "E-7"***, has ***5 solenoids*** on the valve body, was introduced in 1988 and used up thru Mid-1989. This version includes a solenoid for reverse lockout.

The 3rd version, ***designated "E-9"***, has ***4 solenoids*** on the valve body, was introduced in Mid-1989 and used up thru 1994. This version uses a shift solenoid for the reverse lockout function.

MODEL YEAR USAGE CHART

Valve Body Models	*Model Year*								
	86	**87**	**88**	**89**	**90**	**91**	**92**	**93**	**94**
1st Version, Early "E-7", 5 Solenoid									
2nd Version, Late "E-7", 5 Solenoid									
3rd Version, "E-9", 4 Solenoid									

Copyright © 2003 ATSG

Figure 1

FOR ZF 4HP-22/24 SERIES VEHICLES

Refer to Figure 1 for model year usage of the "E7", 5 Solenoid and "E9", 4 Solenoid valve bodies.

Refer to Figure 2 for internal component application chart for all models.

Refer to Figure 3 for shift quadrant and mode switch differences between the different models.

FOR MODEL "E7", "5 SOLENOID" VALVE BODY

Refer to Figure 4 for identification, location and function of the 5 solenoids, along with the shift solenoid firing order for the "E7" 5 solenoid models.

Refer to Figure 5 for internal wire schematic and case connector terminal identification, along with a resistance chart to check the internal electronic components.

Refer to Figure 6 for individual solenoid operation.

Refer to Figure 7 for valve body assembly exploded view.

Refer to Figure 8 for Lower Front Valve Body exploded view, with valve identification, and individual spring specifications, as observed in a used valve body.

Refer to Figure 9 for Lower Rear Valve Body exploded view, with valve identification, and individual spring specifications, as observed in a used valve body.

Refer to Figure 10 for MV-1 and MV-2 Shift Solenoid Body exploded view, with valve identification, and spring specifications, as observed in a used valve body.

Refer to Figure 11 for Pressure Control Solenoid Body exploded view, with solenoid identification.

Refer to Figure 12 for Reverse Lockout Solenoid Body exploded view, with valve identification, and spring specifications, as observed in a used valve body.

Refer to Figures 13, 14, 15, 16 for retainer, checkball and orifice locations.

FOR MODEL "E9", "4 SOLENOID" VALVE BODY
INFORMATION AND THE INDEX
REFER TO FIGURE 17 IN THIS BULLETIN

Copyright © 2003 ATSG

COMPONENT APPLICATION CHART FOR ZF 4HP-22/24 SERIES

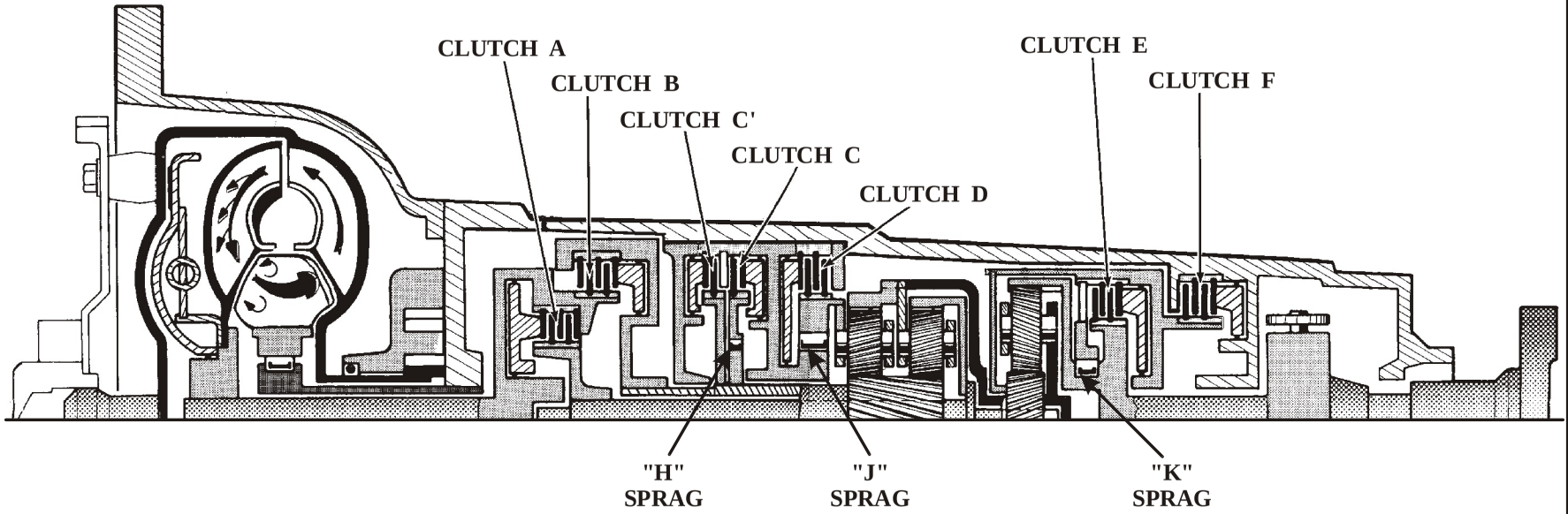

Figure 2

RANGE	"A" Clutch	"B" Clutch	"C' " Clutch	"C" Clutch	"D" Clutch	"E" Clutch	"F" Clutch	"H" Sprag	"J" Sprag	"K" Sprag
Park										
Reverse		ON			ON	ON				*Hold*
Neutral										
"D"-1st	ON					ON			*Hold*	*Hold*
"D"-2nd	ON		ON	ON		ON		*Hold*		*Hold*
"D"-3rd	ON	ON		ON		ON				*Hold*
"D"-4th	ON	ON		ON			ON			
"3"	*Same as above, Automatic Shift 1st thru 3rd, 4th gear is inhibited.*									
"2"	*Same as above, Automatic Shift 1st thru 2nd, 3rd and 4th gear are inhibited.*									
"1"	*Same as above, except "D" Clutch is applied for engine braking*									

Copyright © 2003 ATSG

SHIFT QUADRANTS FOR ZF 4HP-22/24 SERIES

Early "E-7" Models Only (5 Solenoid)

Ⓟ = Parking Pawl Engaged

Ⓡ = Reverse Gear

Ⓝ = Neutral

Ⓓ = Automatic Shifts 1st thru 4th Gears

③ = Automatic Shifts 1st thru 3rd Gears. 4th Gear is locked out.

② = Automatic Shifts 1st thru 2nd Gears. 3rd and 4th Gear is locked out.

① = 1st Gear Only. 2nd, 3rd and 4th Gear is locked out.

Mode Switch Description

A ***rotary*** switch with three fixed positions and an indicator light in the instrument cluster for the 3-2-1 (M) mode when selected

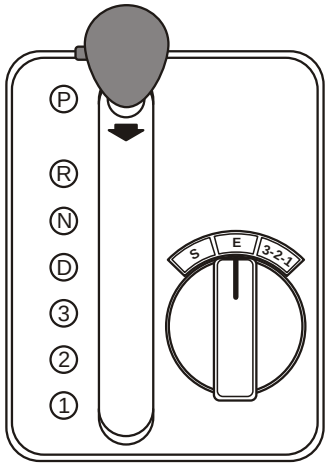

Late "E-7" Models Only (5 Solenoid)

Ⓟ = Parking Pawl Engaged

Ⓡ = Reverse Gear

Ⓝ = Neutral

Ⓓ = Automatic Shifts 1st thru 4th Gears

③ = Automatic Shifts 1st thru 3rd Gears. 4th Gear is locked out.

② = Automatic Shifts 1st thru 2nd Gears. 3rd and 4th Gear is locked out.

① = 1st Gear Only. 2nd, 3rd and 4th Gear is locked out.

Mode Switch Description

A ***three*** position slide switch with Digital display of the three individual positions in instrument cluster (E-S-M). The switch is a momentary contact and spring loaded to a neutral position.

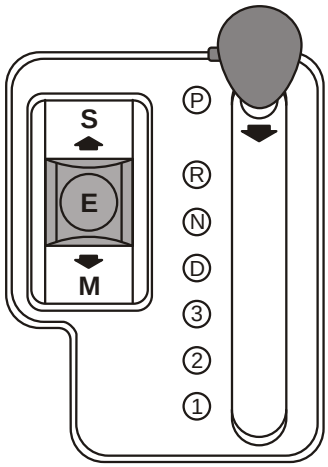

"E-9" Models Only (4 Solenoid)

Ⓟ = Parking Pawl Engaged

Ⓡ = Reverse Gear

Ⓝ = Neutral

Ⓓ = Automatic Shifts 1st thru 4th Gears

③ = Automatic Shifts 1st thru 3rd Gears. 4th Gear is locked out.

② = Automatic Shifts 1st thru 2nd Gears. 3rd and 4th Gear is locked out.

① = 1st Gear Only. 2nd, 3rd and 4th Gear is locked out.

Mode Switch Description

A ***two*** position slide switch for the "A" mode (Economy and "M" mode (Manual). The Sport mode is selected with the range selector in position 3, 2, or 1 and "A" mode selected. The switch is a momentary contact and spring loaded to a neutral position.

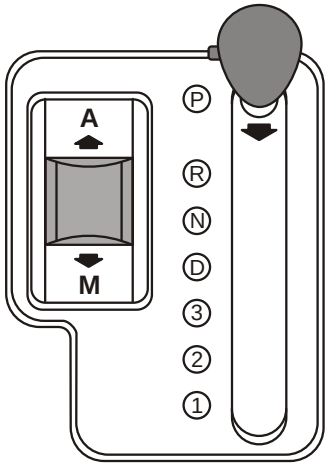

Copyright © 2003 ATSG

Figure 3

ZF-4HP-22/24 MODEL "E-7", "5 SOLENOID" IDENTIFICATION, LOCATION AND FUNCTION

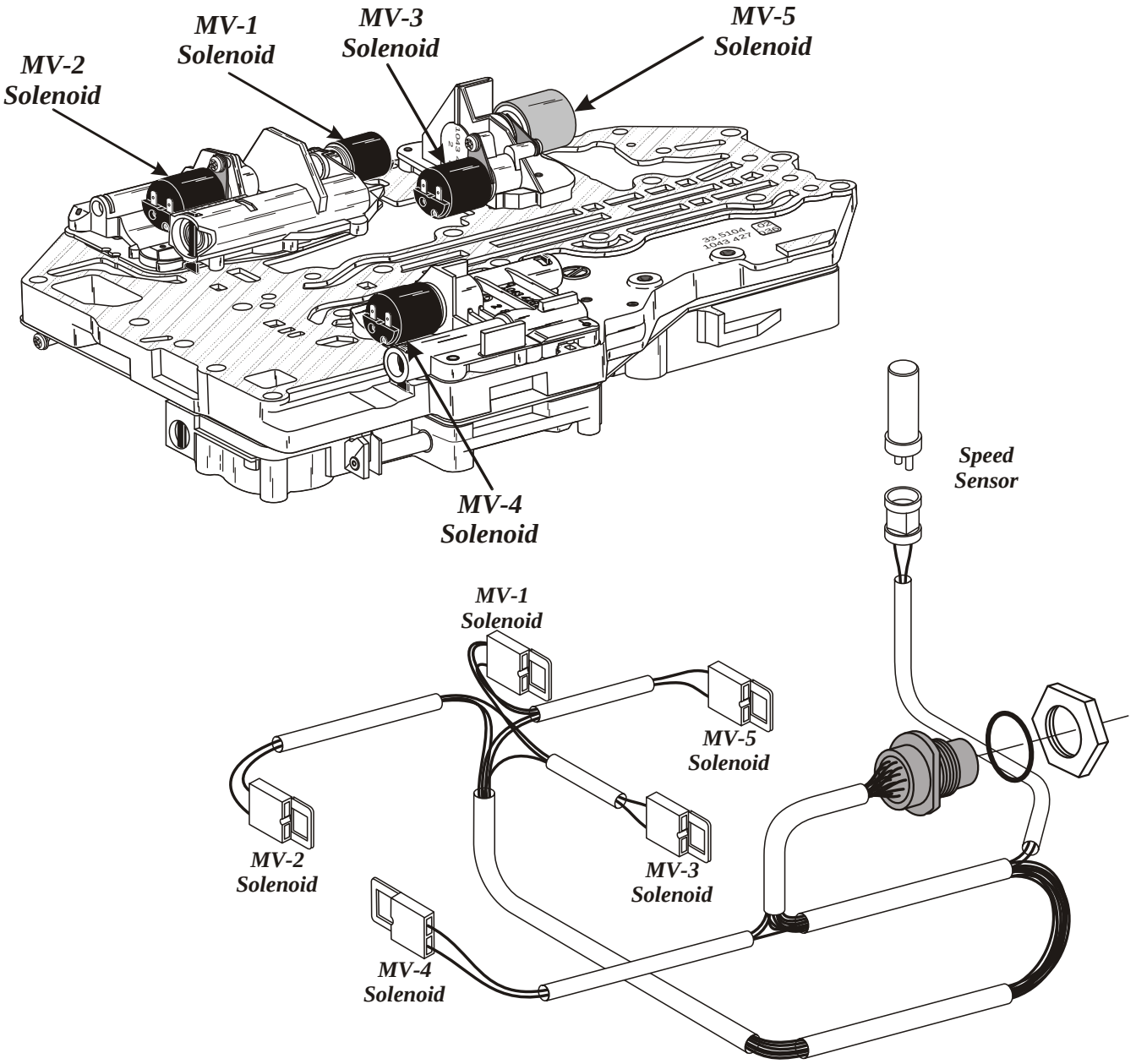

Solenoid	Function	Gear	MV-1	MV-2
MV-1	Shift Control	1st	ON	ON
MV-2	Shift Control	2nd	OFF	ON
		3rd	OFF	OFF
		4th	ON	OFF
MV-3	Lock-Up Control			
MV-4	Reverse Lockout			
MV-5	Line Pressure Control			

Copyright © 2003 ATSG

Figure 4

ZF-4HP-22/24 MODEL "E-7", "5 SOLENOID" INTERNAL WIRE SCHEMATIC AND CONNECTOR TERMINAL IDENTIFICATION

Note: The case connector on this unit is not numbered on connector for identification. ATSG has chosen the numbers you see so that you can use the chart below to do a resistance check on internal components.

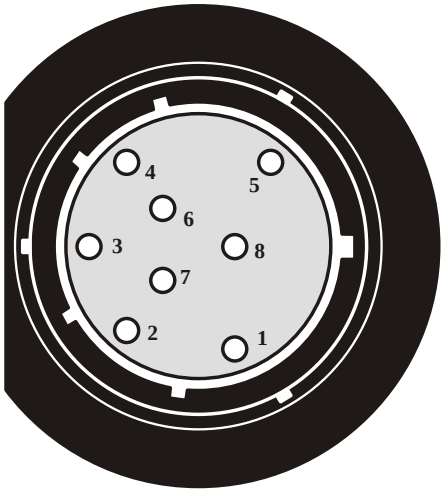

View Looking Into Case Connector

COMPONENT	*TERMINALS*	*RESISTANCE*	*PART NUMBER*
MV 1 Solenoid	*5 And 6*	*30 - 34 Ohms*	*0501 307 869*
MV 2 Solenoid	*8 And 6*	*30 - 34 Ohms*	*0501 307 869*
MV 3 Solenoid	*7 And 6*	*30 - 34 Ohms*	*0501 307 869*
MV 4 Solenoid	*2 And 6*	*30 - 34 Ohms*	*0501 307 869*
MV 5 Solenoid	*1 And 6*	*2.5 - 4.5 Ohms*	*0501 206 997*
Output Speed Sensor	*3 And 4*	*265 Ohms (72° F)*	*0501 311 086*

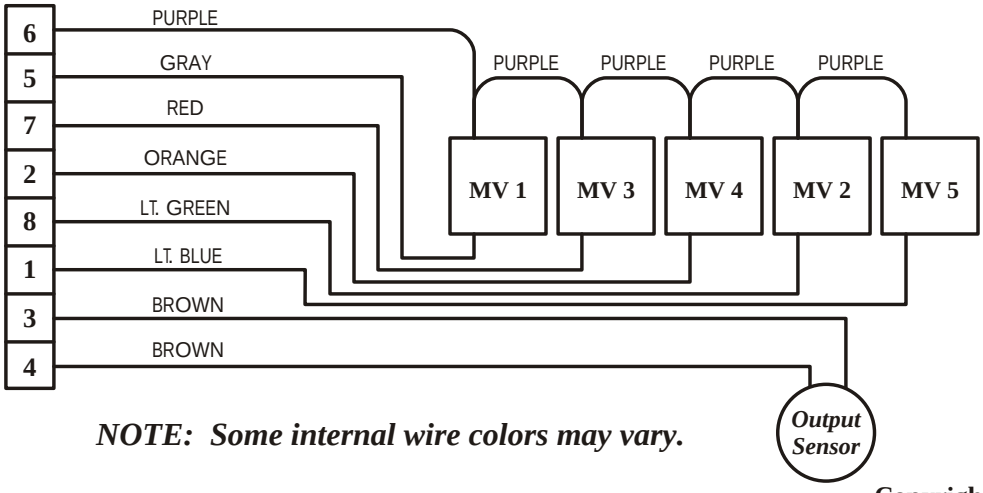

NOTE: Some internal wire colors may vary.

Copyright © 2003 ATSG

Figure 5

ZF-4HP-22 MODEL "E7", "5 SOLENOID" VALVE BODY, SOLENOID OPERATION

MV1, 2, 3 AND 4 OPERATION

SOLENOID "OFF"

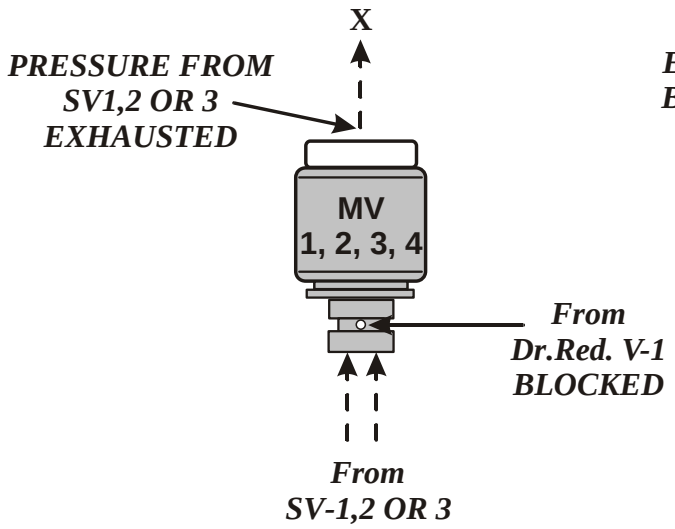

SOLENOID "ON"

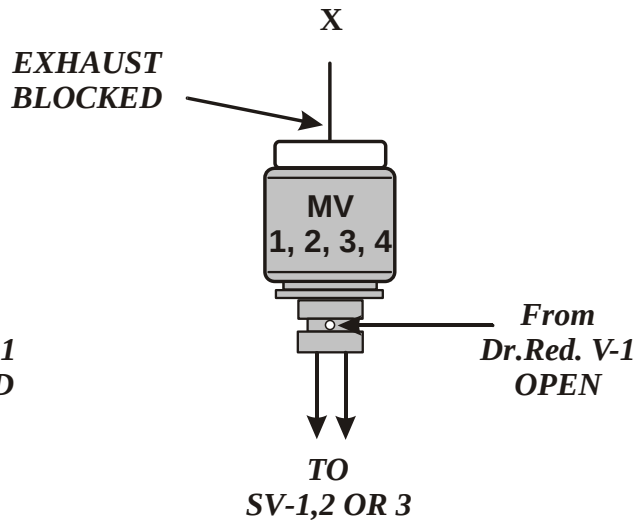

SUMMARY:

When MV 1, 2, 3 or 4 is "OFF" Solenoid reducing pressure, from Dr.Red. V-1, is blocked by the solenoid and oil pressure from SV 1, 2 or 3 is exhausted at the rear of the solenoid.

When MV 1, 2, 3 or 4 is "ON" Solenoid reducing pressure, From Dr.Red. V-1, is open through the solenoid and is applied to SV 1, 2 or 3. The exhaust at the rear of the solenoid is closed.

MV-5 OPERATION

(Line Pressure Solenoid)

SOLENOID "OFF"

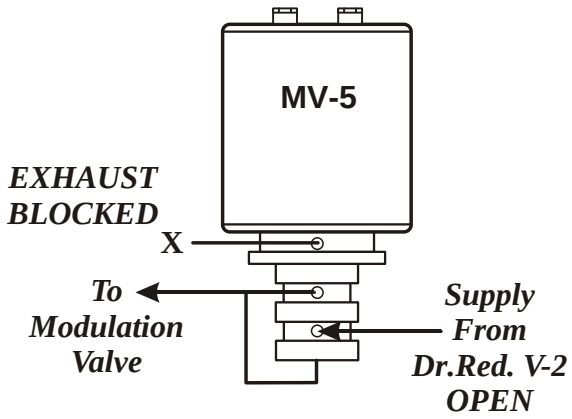

SOLENOID "ON"

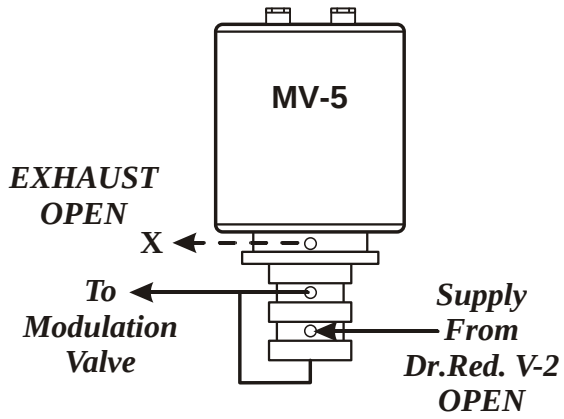

When MV-5 solenoid is "OFF," solenoid reducing pressure, from Dr. Red. V-2, is high to MOD-V valve which creates high line pressure.

When MV-5 solenoid is "ON," solenoid reducing pressure, from Dr. Red. V-2, is low to MOD-V valve which creates low line pressure.

Copyright © 2003 ATSG

Figure 6

ZF-4HP-22/24 MODEL "E-7", "5 SOLENOID"
VALVE BODY ASSEMBLY

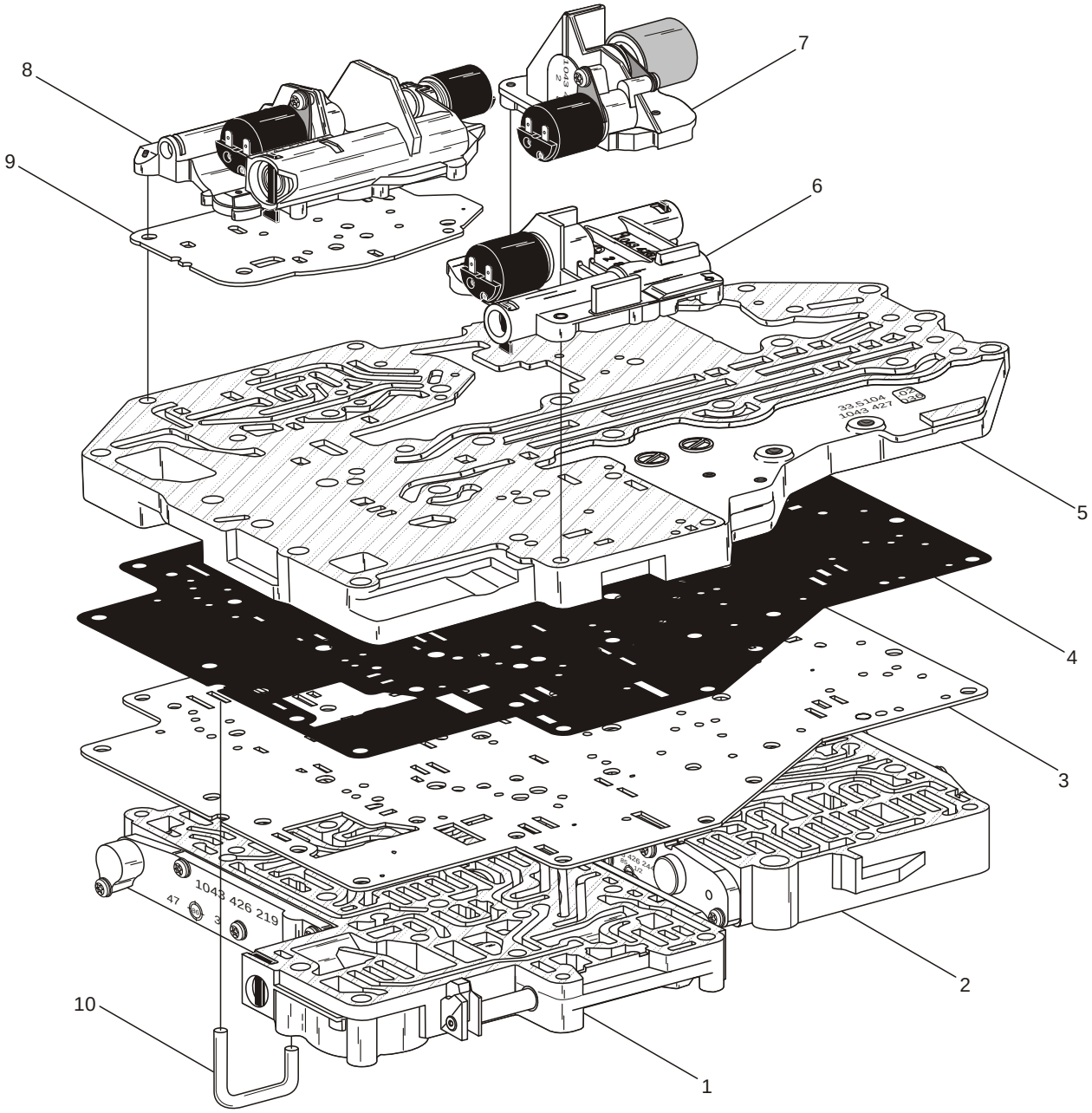

1 LOWER FRONT VALVE BODY ASSEMBLY
2 LOWER REAR VALVE BODY ASSEMBLY
3 VALVE BODY SPACER PLATE
4 SPACER PLATE TO CHANNEL PLATE GASKET
5 CHANNEL PLATE ASSEMBLY
6 MV-4 SOLENOID BODY ASSEMBLY
7 MV-3 AND MV-5 SOLENOID BODY ASSEMBLY
8 MV-1 AND MV-2 SOLENOID BODY ASSEMBLY
9 MV-1/MV-2 SOLENOID BODY TO CHANNEL PLATE SPACER PLATE
10 OIL PIPE, LOWER FRONT VALVE BODY TO CHANNEL PLATE

Copyright © 2003 ATSG

Figure 7

ZF-4HP-22/24 MODEL "E-7", "5 SOLENOID"
LOWER "FRONT" VALVE BODY

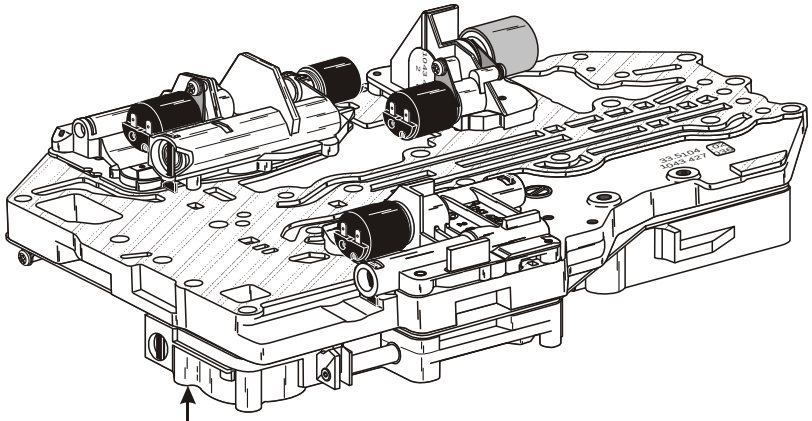

Legend And Spring Specifications Found On Page 10.

Rear Side Exploded View

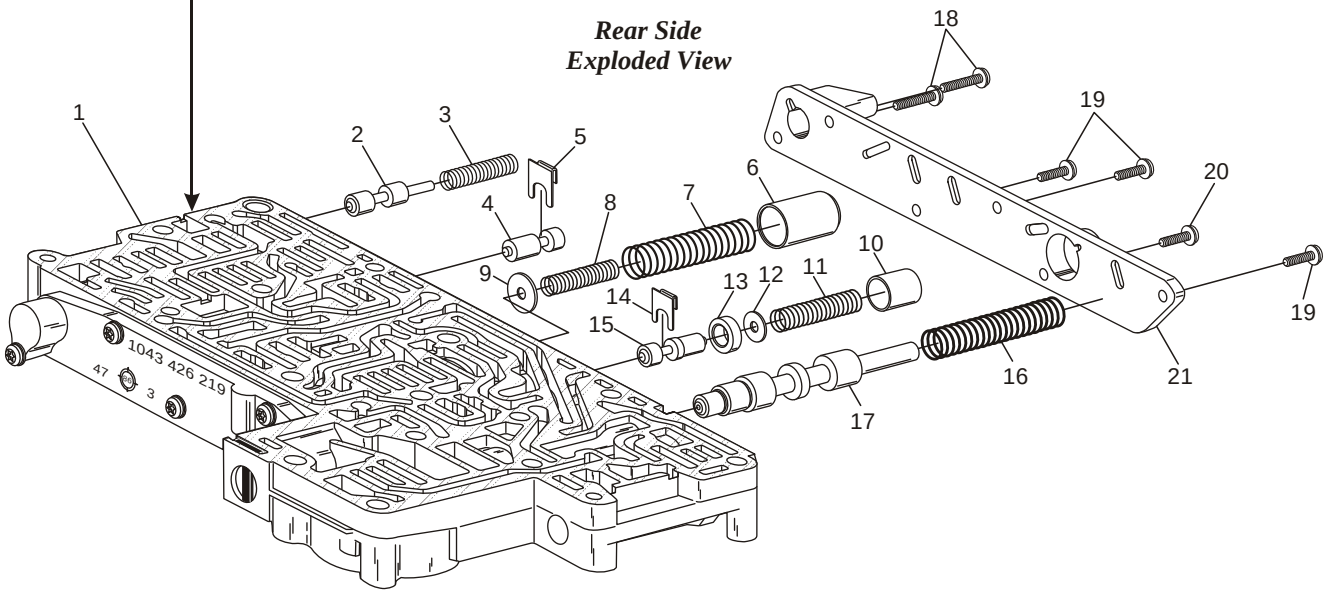

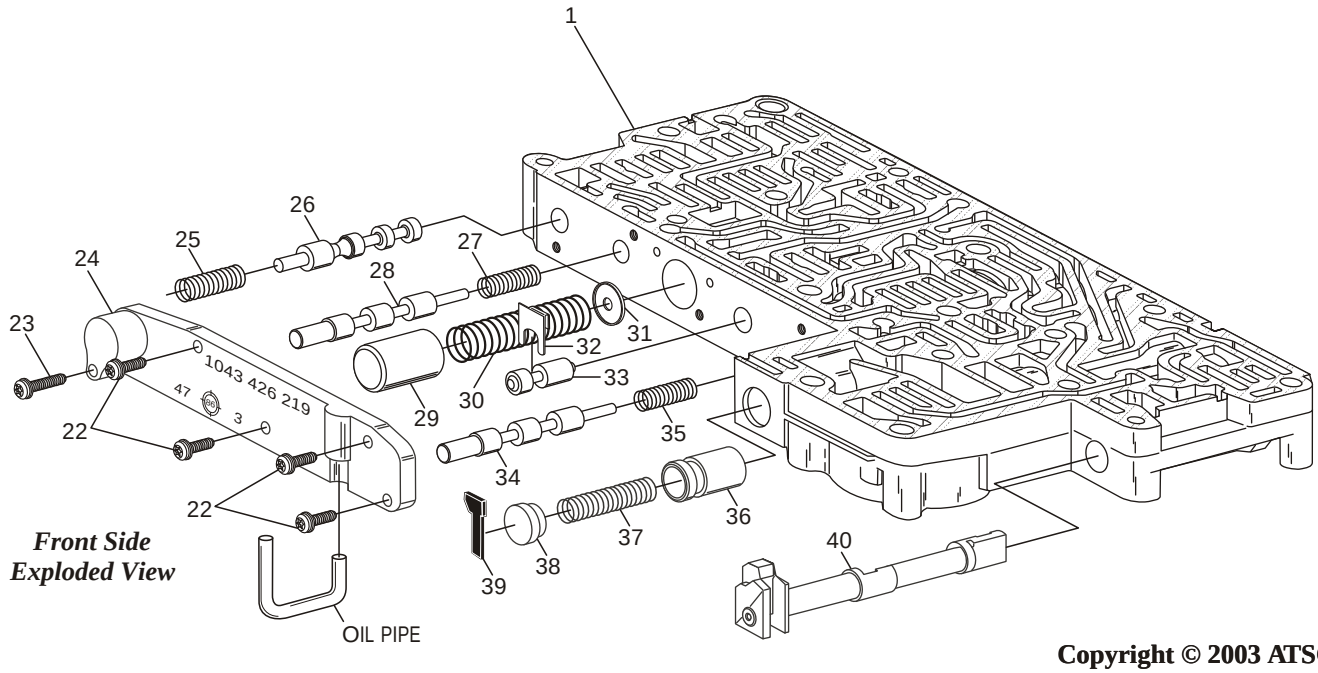

Front Side Exploded View

Copyright © 2003 ATSG

Figure 8

FIGURE 8 LEGEND AND SPRING SPECIFICATIONS

1 LOWER FRONT VALVE BODY CASTING
2 "C' " CLUTCH VALVE
3 "C' " CLUTCH VALVE SPRING
4 "C" CLUTCH VALVE
5 "C" CLUTCH VALVE RETAINER
6 "B" CLUTCH DAMPER PISTON
7 "B" CLUTCH DAMPER PISTON OUTER SPRING
8 "B" CLUTCH DAMPER PISTON INNER SPRING
9 "B" CLUTCH DAMPER PISTON SPRING SEAT
10 "D" CLUTCH DAMPER PISTON
11 "D" CLUTCH DAMPER PISTON SPRING
12 "D" CLUTCH DAMPER PISTON SPRING SEAT
13 "D" CLUTCH VALVE SLEEVE
14 "D" CLUTCH VALVE RETAINER
15 "D" CLUTCH VALVE
16 PRESSURE REGUL ATOR VALVE SPRING
17 PRESSURE REGUL ATOR VALVE
18 REAR SIDE COVER RETAINING BOLT, 34 mm LENGTH (2)
19 REAR SIDE COVER RETAINING BOLT, 17 mm LENGTH (3)
20 REAR SIDE COVER RETAINING BOLT, 21 mm LENGTH (1)
21 REAR SIDE COVER
22 FRONT SIDE COVER RETAINING BOLT, 17 mm LENGTH (4)
23 FRONT SIDE COVER RETAINING BOLT, 29 mm LENGTH (1)
24 FRONT SIDE COVER
25 TORQUE CONVERTER LOCK-UP VALVE SPRING
26 TORQUE CONVERTER LOCK-UP VALVE
27 2-3 SHIFT VALVE SPRING
28 2-3 SHIFT VALVE
29 "C" CLUTCH DAMPER PISTON
30 "C" CLUTCH DAMPER PISTON SPRING
31 "C" CLUTCH DAMPER PISTON SPRING SEAT
32 "B" CLUTCH REGULATOR VALVE RETAINER
33 "B" CLUTCH REGULATOR VALVE
34 1-2 SHIFT VALVE
35 1-2 SHIFT VALVE SPRING
36 "A" CLUTCH DAMPER PISTON
37 "A" CLUTCH DAMPER SPRING
38 "A" CLUTCH DAMPER PISTON SPRING SEAT
39 "A" CLUTCH DAMPER SPRING SEAT RETAINER
40 MANUAL SHIFT VALVE

SPRING ILLUSTRATION NO. 3:
FREE LENGTH = 1.495"
SPRING DIAMETER = .360"
WIRE DIAMETER = .035"

SPRING ILLUSTRATION NO. 7:
FREE LENGTH = 3.160"
SPRING DIAMETER = .595"
WIRE DIAMETER = .044"

SPRING ILLUSTRATION NO. 8:
FREE LENGTH = 1.560"
SPRING DIAMETER = .430"
WIRE DIAMETER = .040"

SPRING ILLUSTRATION NO. 11:
FREE LENGTH = 1.653"
SPRING DIAMETER = .550"
WIRE DIAMETER = .044"

SPRING ILLUSTRATION NO. 16:
FREE LENGTH = 3.575"
SPRING DIAMETER = .600"
WIRE DIAMETER = .080"

SPRING ILLUSTRATION NO. 25:
FREE LENGTH = 1.830"
SPRING DIAMETER = .435"
WIRE DIAMETER = .040"

SPRING ILLUSTRATION NO. 27:
FREE LENGTH = 1.660"
SPRING DIAMETER = .360"
WIRE DIAMETER = .036"

SPRING ILLUSTRATION NO. 30:
FREE LENGTH = 3.160"
SPRING DIAMETER = .595"
WIRE DIAMETER = .044"

SPRING ILLUSTRATION NO. 35:
FREE LENGTH = 1.660"
SPRING DIAMETER = .360"
WIRE DIAMETER = .036"

SPRING ILLUSTRATION NO. 37:
FREE LENGTH = 2.515"
SPRING DIAMETER = .410"
WIRE DIAMETER = .050"

Copyright © 2003 ATSG

Figure 8 Legend

Copyright © 2003 ATSG

ZF-4HP-22/24 MODEL "E-7", "5 SOLENOID"
LOWER "REAR" VALVE BODY

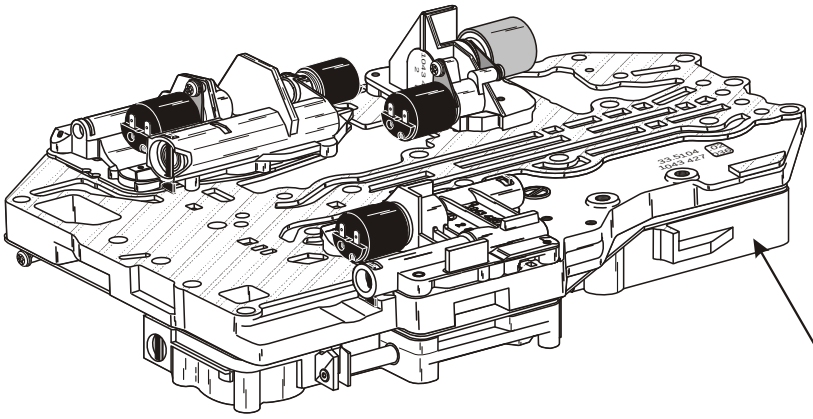

Legend And Spring Specifications Found On Next Page.

Rear Side Exploded View

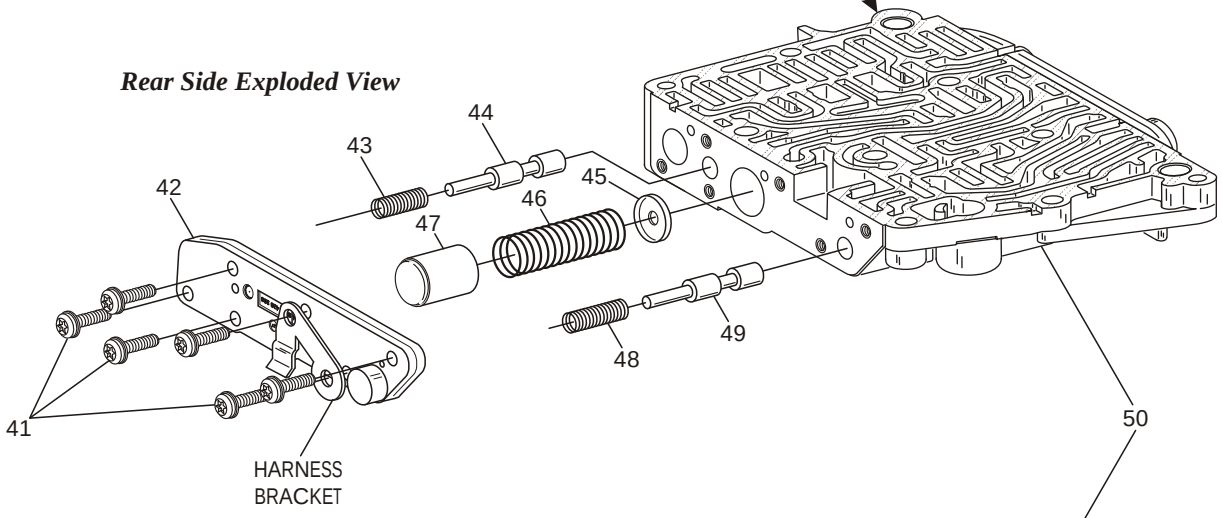

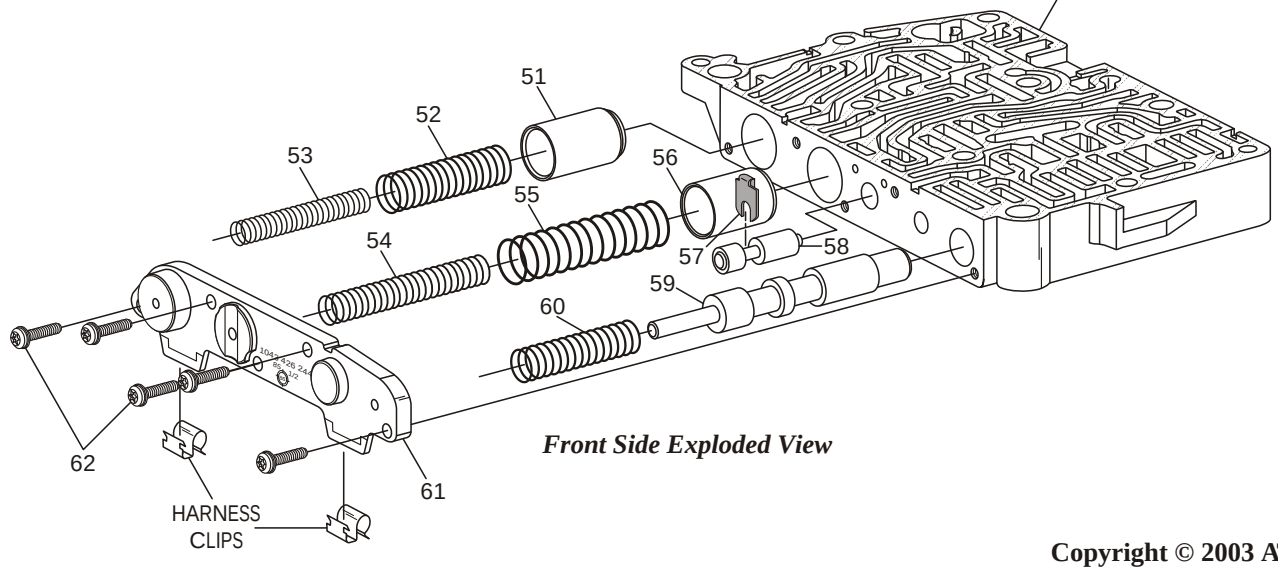

Front Side Exploded View

Copyright © 2003 ATSG

Figure 9

FIGURE 9 LEGEND AND SPRING SPECIFICATIONS

41 REAR SIDE COVER RETAINING BOLTS, 17 mm LENGTH (6)
42 REAR SIDE COVER
43 PRESSURE REDUCING VALVE "2" SPRING
44 PRESSURE REDUCING VALVE "2"
45 "F" CLUTCH DAMPER PISTON SPRING SEAT
46 "F" CLUTCH DAMPER PISTON SPRING
47 "F" CLUTCH DAMPER PISTON
48 PRESSURE REDUCING VALVE "1" SPRING
49 PRESSURE REDUCING VALVE "1"
50 LOWER REAR VALVE BODY CASTING
51 "C' " CLUTCH DAMPER PISTON
52 "C' " CLUTCH DAMPER PISTON OUTER SPRING
53 "C' " CLUTCH DAMPER PISTON INNER SPRING
54 "E" CLUTCH DAMPER PISTON INNER SPRING
55 "E" CLUTCH DAMPER PISTON OUTER SPRING
56 "E" CLUTCH DAMPER PISTON
57 "F" CLUTCH VALVE RETAINER
58 "F" CLUTCH VALVE
59 3-4 SHIFT VALVE
60 3-4 SHIFT VALVE SPRING
61 FRONT SIDE COVER
62 FRONT SIDE COVER RETAINING BOLTS, 17 mm LENGTH (5)

SPRING ILLUSTRATION NO. 43:
FREE LENGTH = 1.365"
SPRING DIAMETER = .355"
WIRE DIAMETER = .044"

SPRING ILLUSTRATION NO. 46:
FREE LENGTH = 3.290"
SPRING DIAMETER = .600"
WIRE DIAMETER = .043"

SPRING ILLUSTRATION NO. 48:
FREE LENGTH = 1.535"
SPRING DIAMETER = .365"
WIRE DIAMETER = .044"

SPRING ILLUSTRATION NO. 52:
FREE LENGTH = 2.945"
SPRING DIAMETER = .600"
WIRE DIAMETER = .066"

SPRING ILLUSTRATION NO. 53:
FREE LENGTH = 3.511"
SPRING DIAMETER = .405"
WIRE DIAMETER = .049"

SPRING ILLUSTRATION NO. 54:
FREE LENGTH = 4.556"
SPRING DIAMETER = .510"
WIRE DIAMETER = .037"

SPRING ILLUSTRATION NO. 55:
FREE LENGTH = 3.330"
SPRING DIAMETER = .685"
WIRE DIAMETER = .070"

SPRING ILLUSTRATION NO. 60:
FREE LENGTH = 2.445"
SPRING DIAMETER = .472"
WIRE DIAMETER = .040"

Copyright © 2003 ATSG

Figure 9 Legend

ZF-4HP-22/24 MODEL "E-7", "5 SOLENOID"
SHIFT SOLENOID BODY

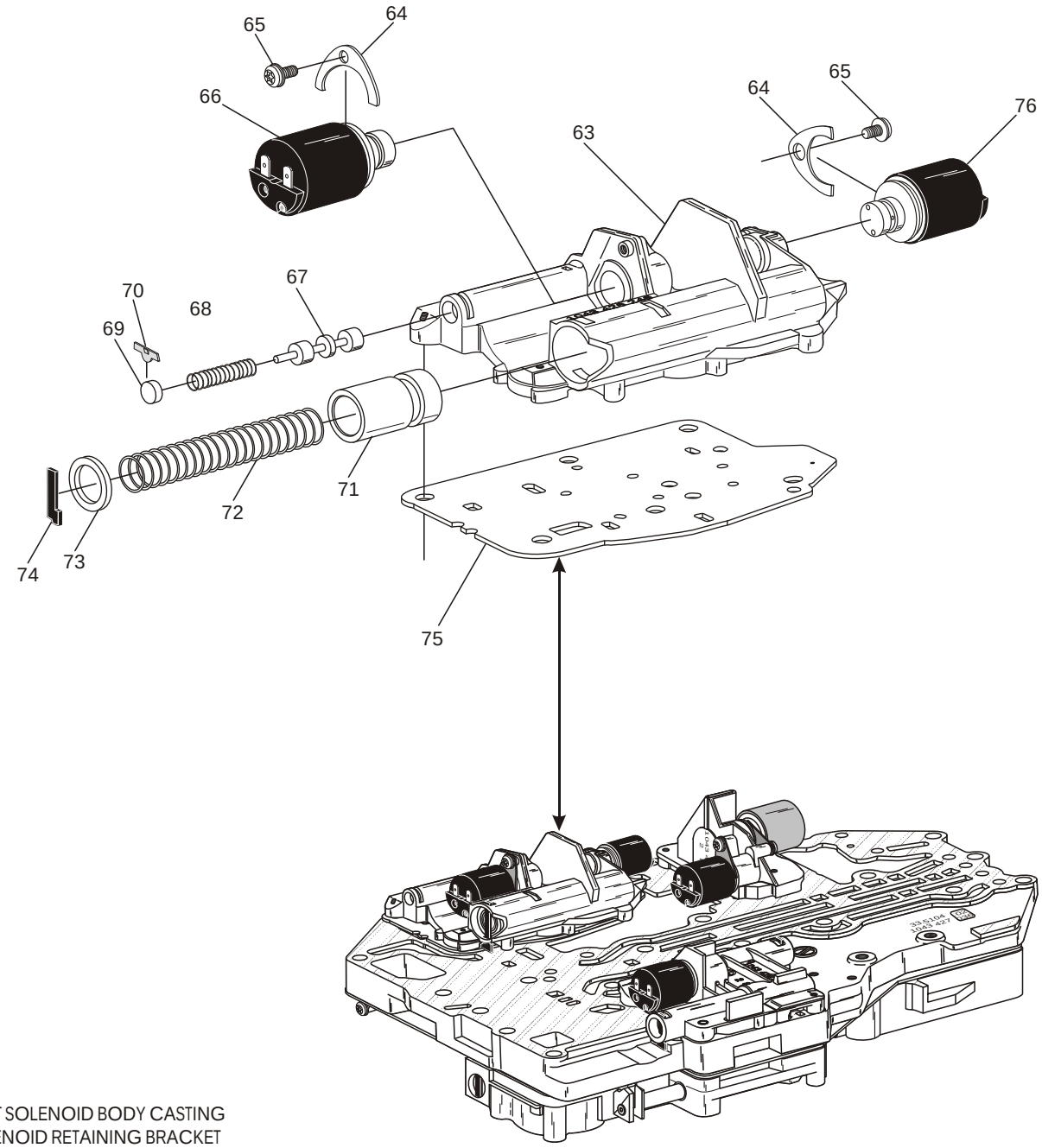

63 SHIFT SOLENOID BODY CASTING
64 SOLENOID RETAINING BRACKET
65 SOLENOID RETAINING BOLT, 11 mm LENGTH
66 MV-2 SHIFT SOLENOID ASSEMBLY
67 1-2 AND 3-4 SHIFT CONTROL VALVE
68 1-2 AND 3-4 SHIFT CONTROL VALVE SPRING
69 1-2 AND 3-4 SHIFT CONTROL VALVE BORE PLUG
70 1-2 AND 3-4 SHIFT CONTROL BORE PLUG RETAINER
71 T.C.C. LOCK-UP DAMPER PISTON
72 T.C.C. LOCK-UP DAMPER PISTON SPRING
73 T.C.C. LOCK-UP DAMPER PISTON SPRING SEAT
74 T.C.C. LOCK-UP DAMPER PISTON SPRING SEAT RETAINER
75 SOLENOID BODY TO CHANNEL PLATE SPACER PLATE
76 MV-1 SHIFT SOLENOID ASSEMBLY

SPRING ILLUSTRATION NO. 68:
FREE LENGTH = 1.542"
SPRING DIAMETER = .372"
WIRE DIAMETER = .035"

SPRING ILLUSTRATION NO. 72:
FREE LENGTH = 3.622"
SPRING DIAMETER = .422"
WIRE DIAMETER = .044"

Copyright © 2003 ATSG

Figure 10

ZF-4HP-22/24 MODEL "E-7", "5 SOLENOID"
PRESSURE CONTROL SOLENOID BODY

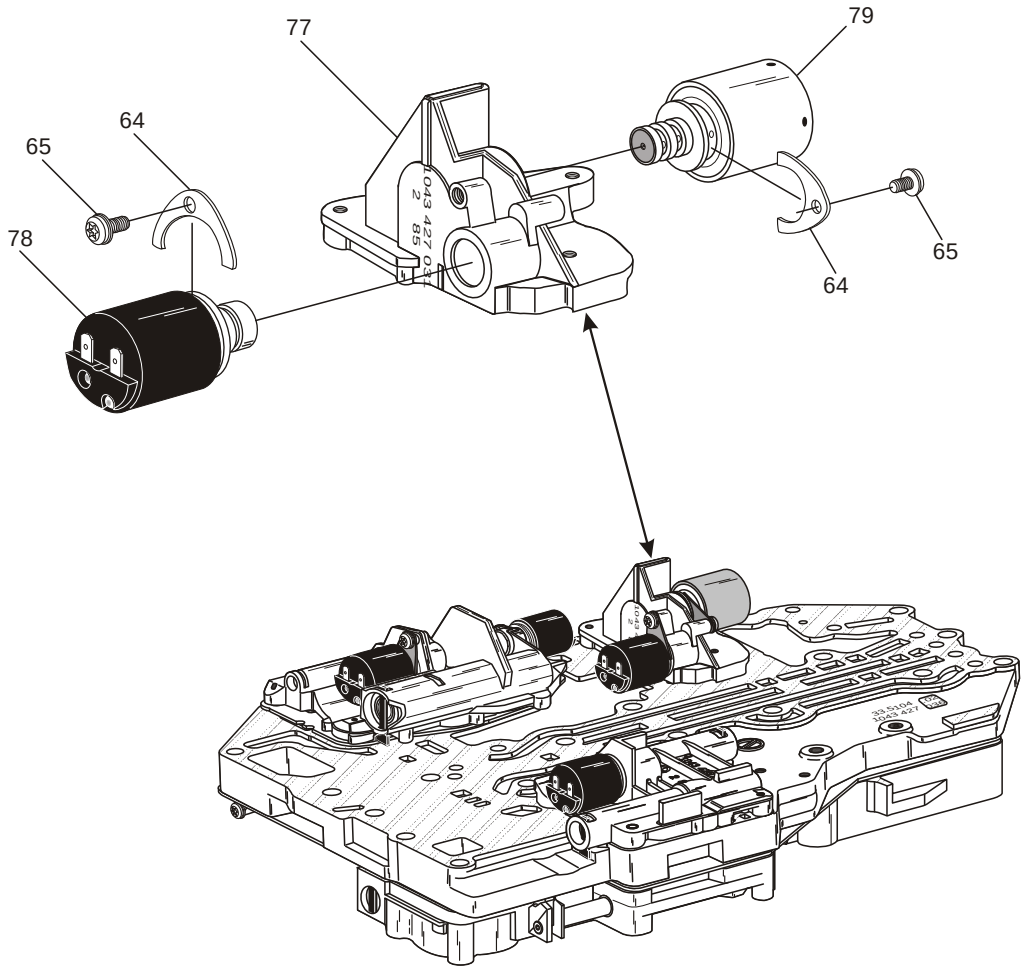

64 SOLENOID RETAINING BRACKET
65 SOLENOID RETAINING BOLT, 11 mm LENGTH
77 PRESSURE CONTROL SOLE NOID BODY CASTING
78 MV-3 LOCK-UP CONTROL SOLENOID ASSEMBLY
79 MV-5 PRESSURE CONTROL SOLENOID ASSEMBLY

Copyright © 2003 ATSG

Figure 11

ZF-4HP-22/24 MODEL "E-7", "5 SOLENOID"
REVERSE LOCKOUT SOLENOID BODY

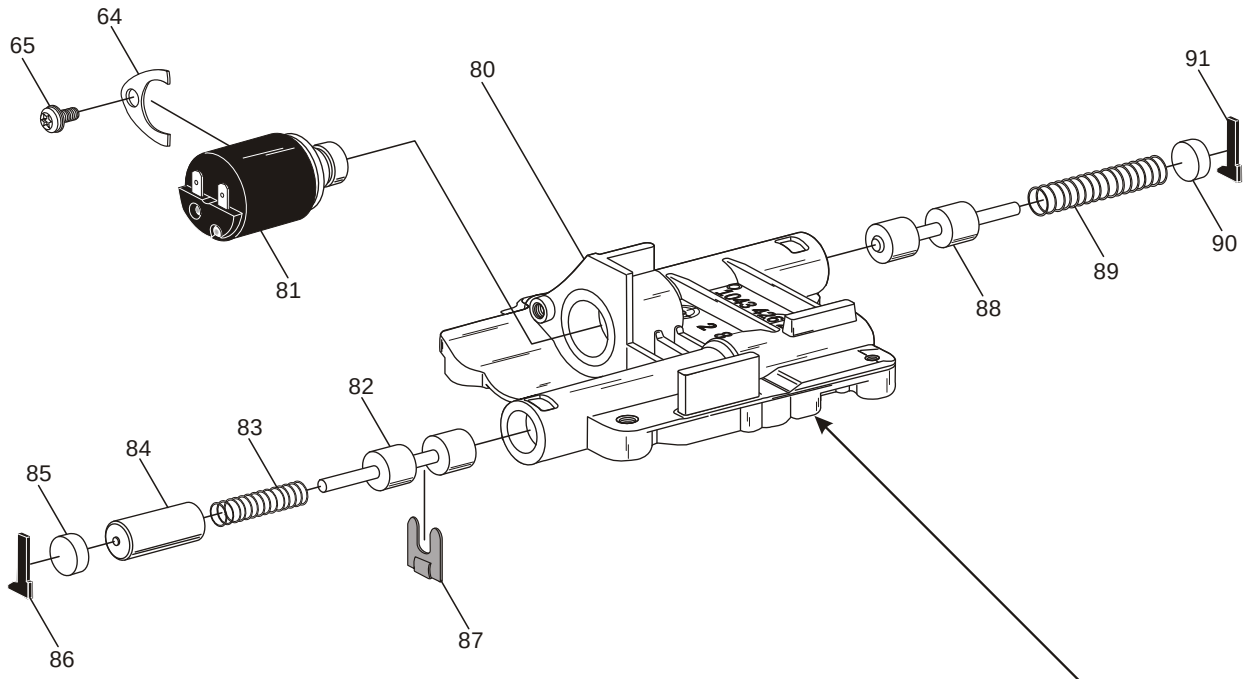

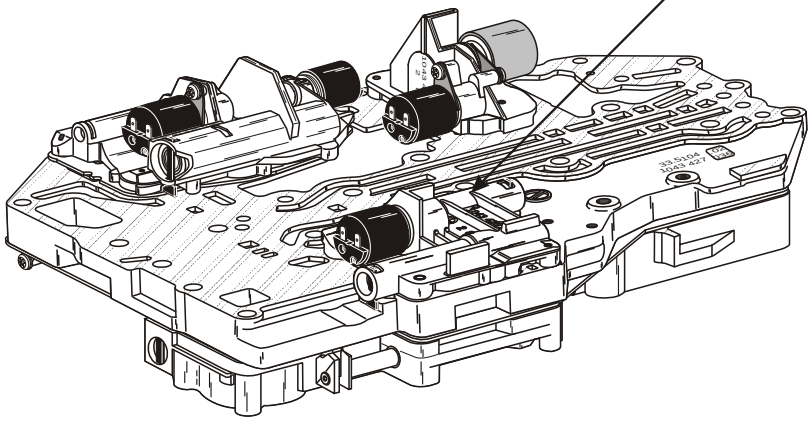

64 SOLENOID RETAINING BRACKET
65 SOLENOID RETAINING BOLT, 11 mm LENGTH
80 REVERSE LOCKOUT SOLENOID BODY CASTING
81 MV-4 REVERSE LOCKOUT SOLENOID ASSEMBLY
82 MODUL ATION VALVE
83 MODUL ATION VALVE SPRING
84 MODUL ATION VALVE SLEEVE
85 MODUL ATION VALVE BORE PLUG
86 MODUL ATION VALVE BORE PLUG RETAINER
87 MODUL ATION VALVE RETAINER
88 REVERSE LOCKOUT VALVE
89 REVERSE LOCKOUT VALVE SPRING
90 REVERSE LOCKOUT VALVE SPRING SEAT
91 REVERSE LOCKOUT SPRING SEAT RETAINER

SPRING ILLUSTRATION NO. 83:
FREE LENGTH = 1.480"
SPRING DIAMETER = .310"
WIRE DIAMETER = .035"

SPRING ILLUSTRATION NO. 89:
FREE LENGTH = 1.870"
SPRING DIAMETER = .380"
WIRE DIAMETER = .035"

Copyright © 2003 ATSG

Figure 12

ZF-4HP-22/24 MODEL "E-7", "5 SOLENOID"
LOWER "FRONT" VALVE BODY

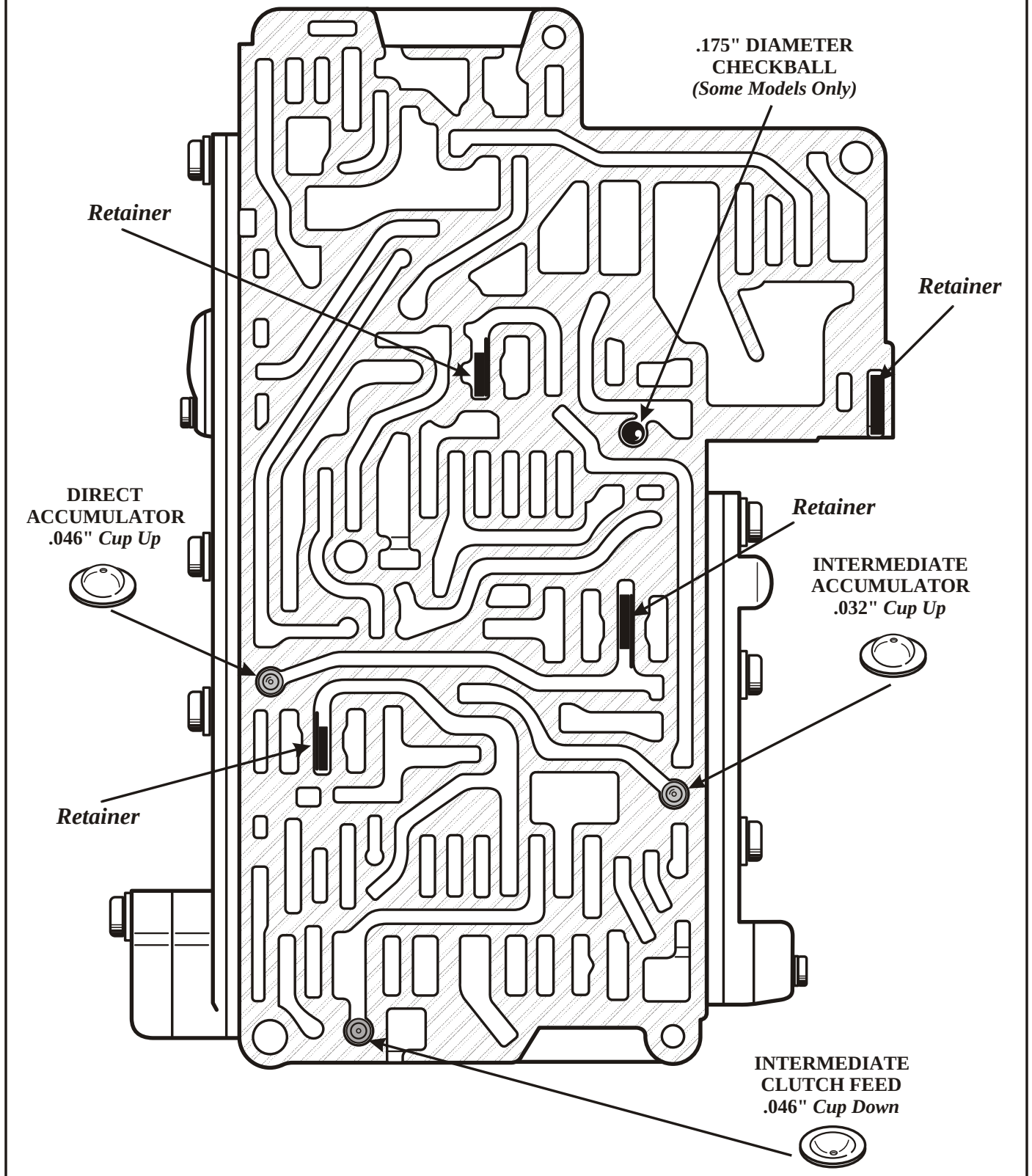

Copyright © 2003 ATSG

Figure 13

ZF-4HP-22/24 MODEL "E-7", "5 SOLENOID"
LOWER "REAR" VALVE BODY

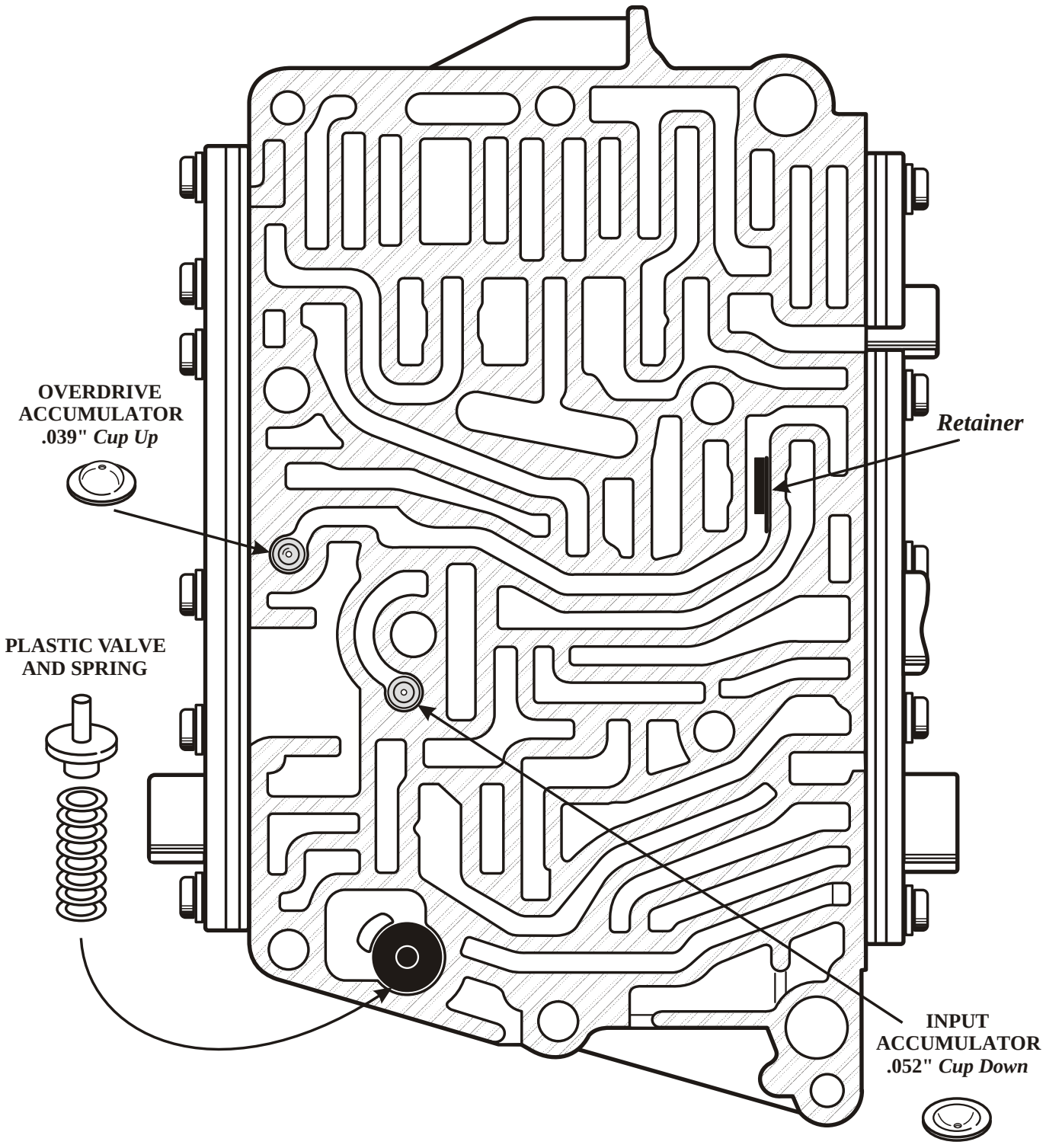

Copyright © 2003 ATSG

Figure 14

ZF-4HP-22/24 MODEL "E-7", "5 SOLENOID"
CHANNEL PLATE

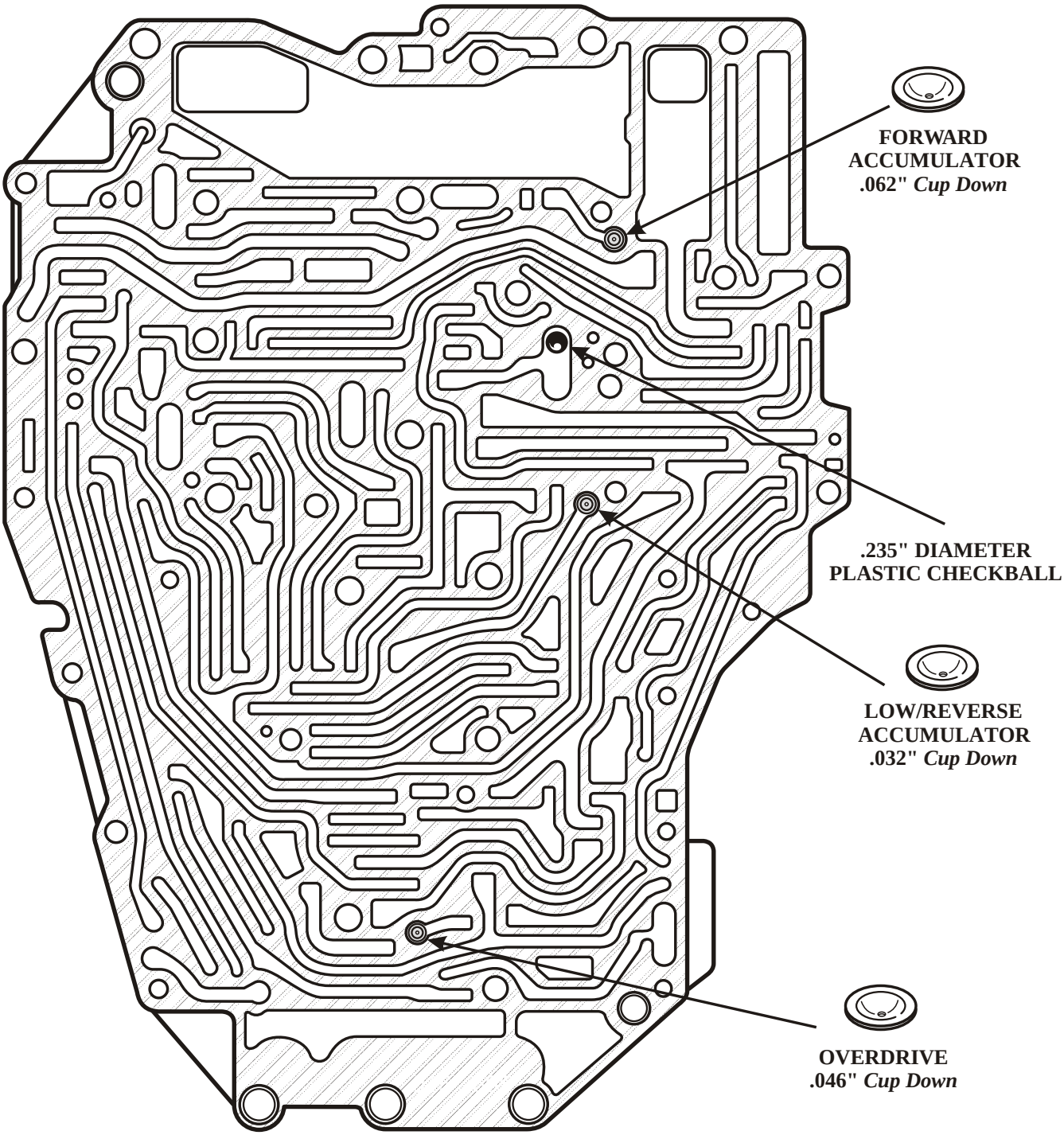

Copyright © 2003 ATSG

Figure 15

ZF-4HP-22/24 MODEL "E-7", "5 SOLENOID"
ALL SOLENOID BODIES

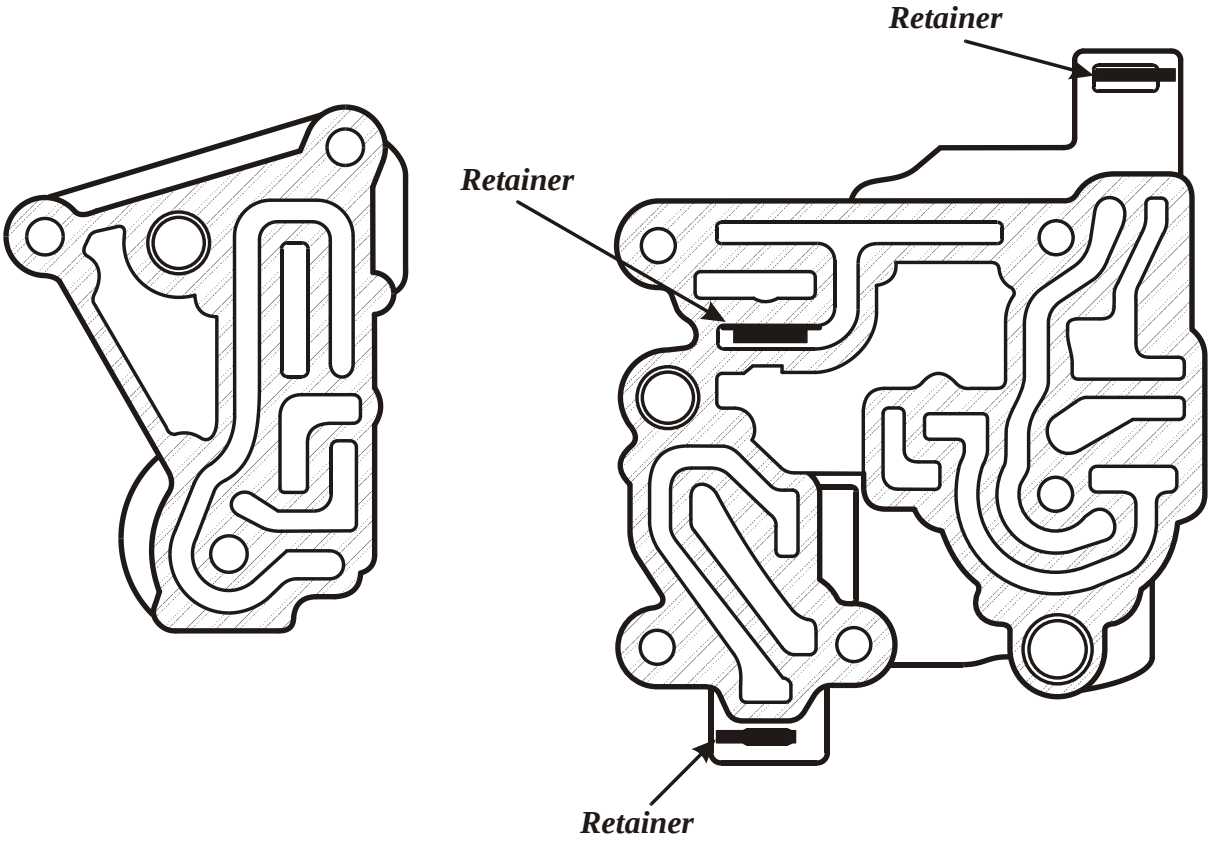

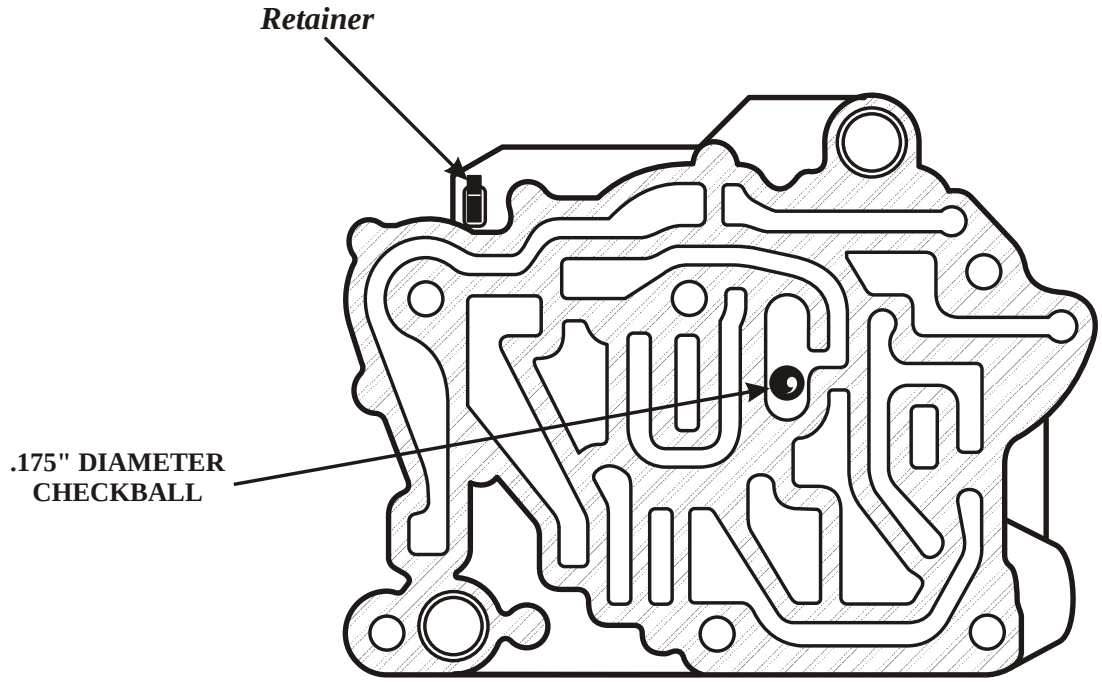

Copyright © 2008 ATSG

Figure 16

ZF 4HP-22/24 SERIES
DIAGNOSTIC INFORMATION

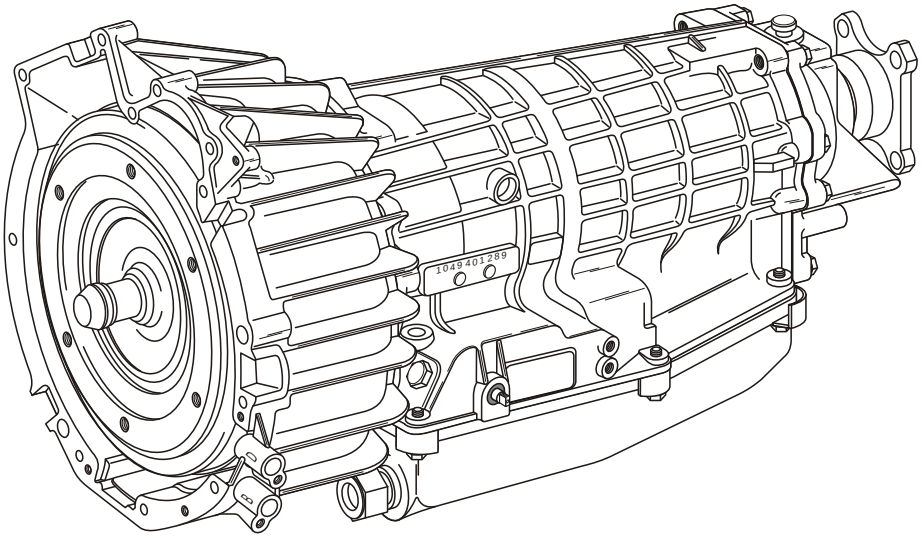

FOR MODEL "E9", "4 SOLENOID" VALVE BODY

Refer to Figure 18 for identification, location and function of the 5 solenoids, along with the shift solenoid firing order for the "E9" 4 solenoid models.

Refer to Figure 19 for internal wire schematic and case connector terminal identification, along with a resistance chart to check the internal electronic components.

Refer to Figure 20 for individual solenoid operation.

Refer to Figure 21 for Complete Valve Body Assembly exploded view.

Refer to Figure 22 for Lower Front Valve Body exploded view, with valve identification.

Refer to Figure 23 for Lower Rear Valve Body exploded view, with valve identification.

Refer to Figure 24 for MV-5 Solenoid Body exploded view, with valve identification.

Refer to Figure 25 for MV-1 and MV-2 Solenoid Body exploded view, with valve identification.

Refer to Figure 26 for MV-3 Lock-Up Solenoid Body exploded view, with identification.

Refer to Figures 27, 28, 29 and 30 for retainer, checkball and orifice locations.

MODEL YEAR USAGE CHART

Valve Body Models	*Model Year*								
	86	**87**	**88**	**89**	**90**	**91**	**92**	**93**	**94**
1st Version, Early "E-7", 5 Solenoid									
2nd Version, Late "E-7", 5 Solenoid									
3rd Version, "E-9", 4 Solenoid									

Copyright © 2003 ATSG

Figure 17

ZF-4HP-22/24 MODEL "E-9", "4 SOLENOID" IDENTIFICATION, LOCATION AND FUNCTION

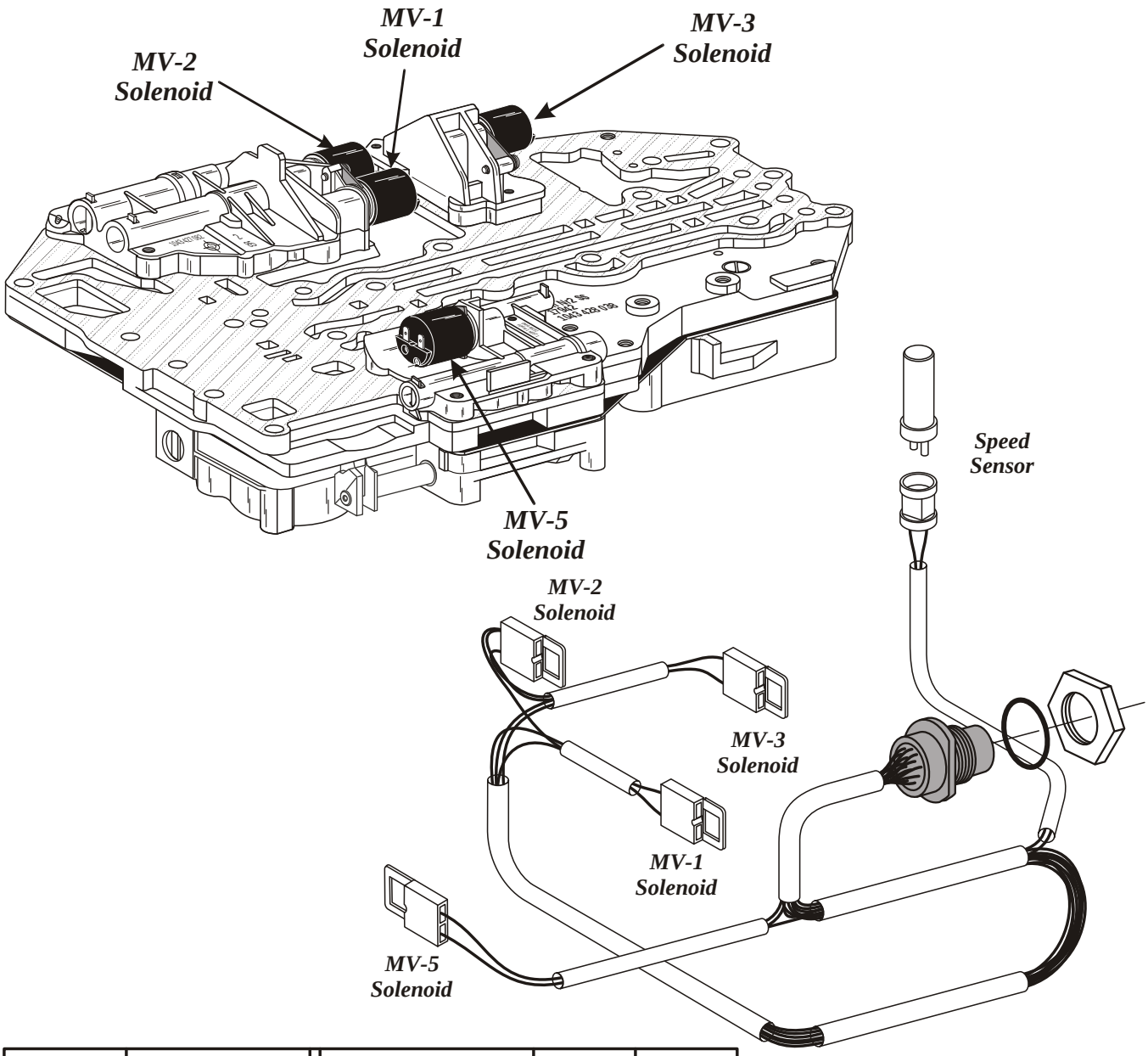

Solenoid	Function	Gear	MV-1	MV-2
MV-1	Shift Control	1st	OFF	ON
MV-2	Shift Control	2nd	ON	ON
		3rd	ON	OFF
		4th	OFF	OFF
		Rev 0 mph	ON	OFF
		Rev Above 3 mph	OFF	ON
MV-3	Lock-Up Control			
MV-5	Line Pressure Control			

Copyright © 2003 ATSG

Figure 18

ZF-4HP-22/24 MODEL "E-9", "4 SOLENOID" INTERNAL WIRE SCHEMATIC AND CONNECTOR TERMINAL IDENTIFICATION

Note: The case connector on this unit is not numbered on connector for identification. ATSG has chosen the numbers you see so that you can use the chart below to do a resistance check on internal components.

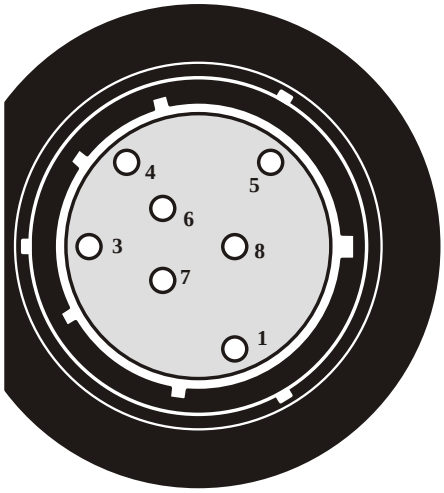

View Looking Into Case Connector

COMPONENT	*TERMINALS*	*RESISTANCE*	*PART NUMBER*
MV 1 Solenoid	*5 And 6*	*30 - 34 Ohms*	*0501 310 967*
MV 2 Solenoid	*8 And 6*	*30 - 34 Ohms*	*0501 310 967*
MV 3 Solenoid	*7 And 6*	*30 - 34 Ohms*	*0501 310 967*
MV 5 Solenoid	*1 And 6*	*4.5 - 6.5 Ohms*	*0501 311 500*
Output Speed Sensor	*3 And 4*	*265 Ohms (72° F)*	*0501 311 086*

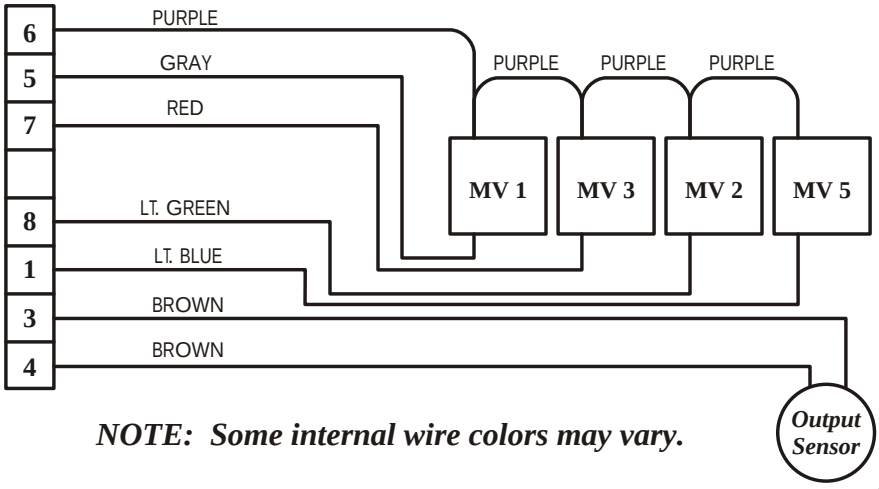

NOTE: Some internal wire colors may vary.

Copyright © 2003 ATSG

Figure 19

ZF-4HP-22/24 MODEL "E-9", "4 SOLENOID" VALVE BODY, SOLENOID OPERATION

MV1-MV3

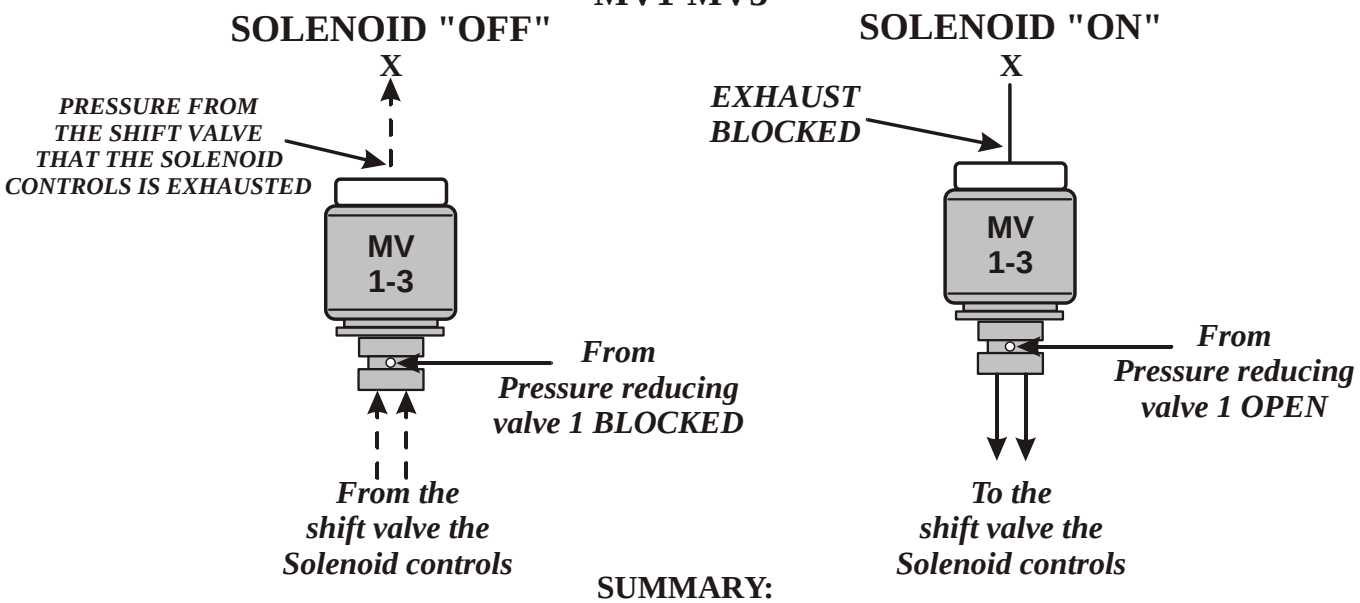

SUMMARY:

When MV 1 thru 3 is in the "OFF" state, Solenoid reducing pressure, from Pressure reducing valve 1, is blocked by the solenoid and oil pressure from the valve that the solenoid controls is exhausted at the rear of the solenoid.

When MV 1 thru 3 is in the "ON"state, Solenoid reducing pressure, from Pressure reducing valve 1, is open through the solenoid and is applied to the valve that the solenoid controls. The exhaust at the rear of the solenoid is closed.

MV-5

(Line Pressure Solenoid)

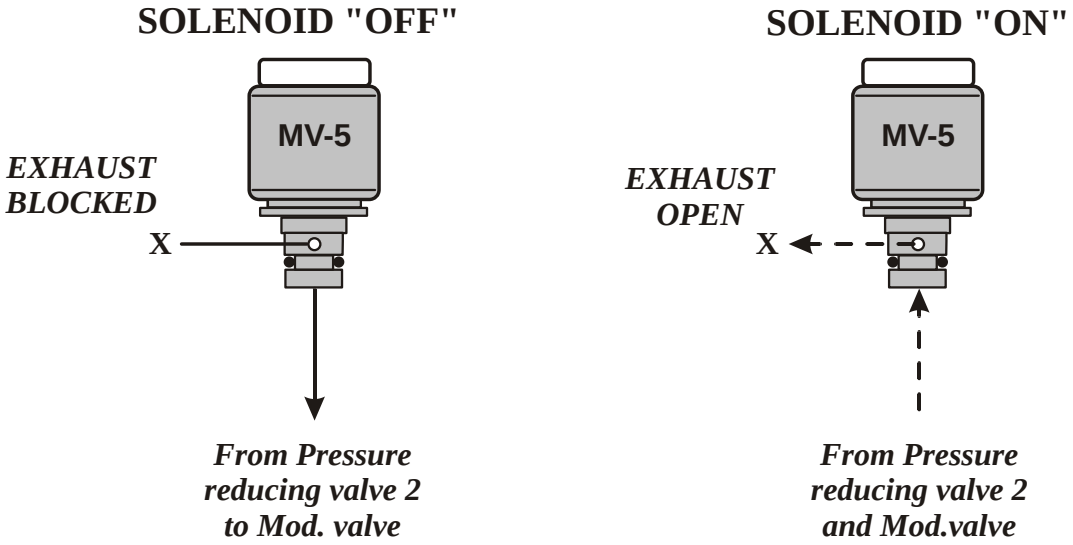

SUMMARY:

When MV-5 solenoid is "OFF," solenoid reducing pressure, from Pressure reducing valve 2, is high to the Modulating valve which creates high line pressure.

When MV-5 solenoid is "ON," solenoid reducing pressure, from Pressure reducing valve 2, is low to the Modulating valve which creates low line pressure.

Copyright © 2003 ATSG

Figure 20

ZF-4HP-22/24 MODEL "E-9", "4 SOLENOID" VALVE BODY ASSEMBLY

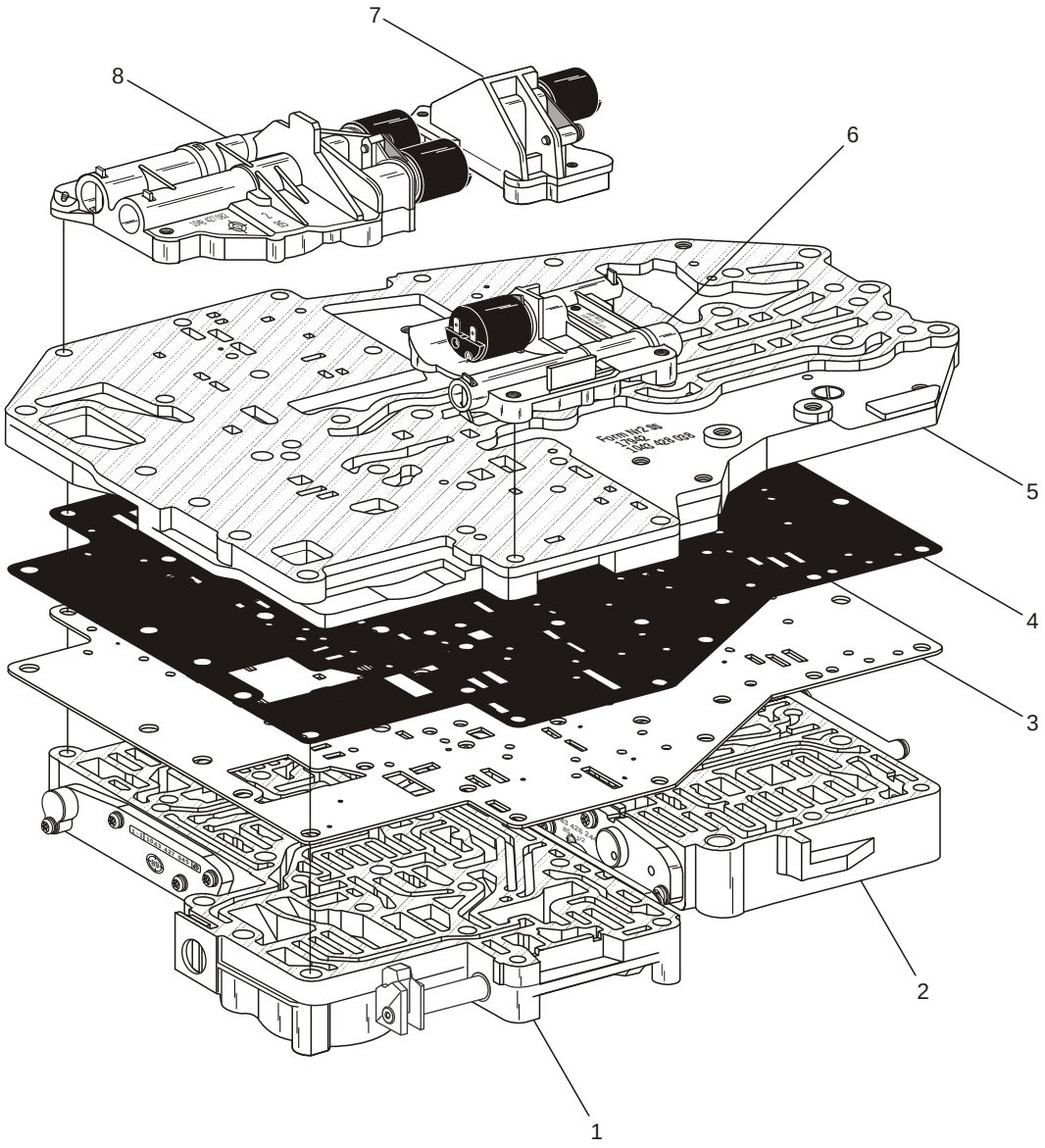

1 LOWER FRONT VALVE BODY ASSEMBLY
2 LOWER REAR VALVE BODY ASSEMBLY
3 VALVE BODY SPACER PLATE
4 SPACER PLATE TO CHANNEL PLATE GASKET
5 CHANNEL PLATE ASSEMBLY
6 MV-5 SOLENOID BODY ASSEMBLY
7 MV-3 SOLENOID BODY ASSEMBLY
8 MV-1 AND MV-2 SOLENOID BODY ASSEMBLY

Copyright © 2003 ATSG

Figure 21

ZF-4HP-22/24 MODEL "E-9", "4 SOLENOID"
LOWER "FRONT" VALVE BODY

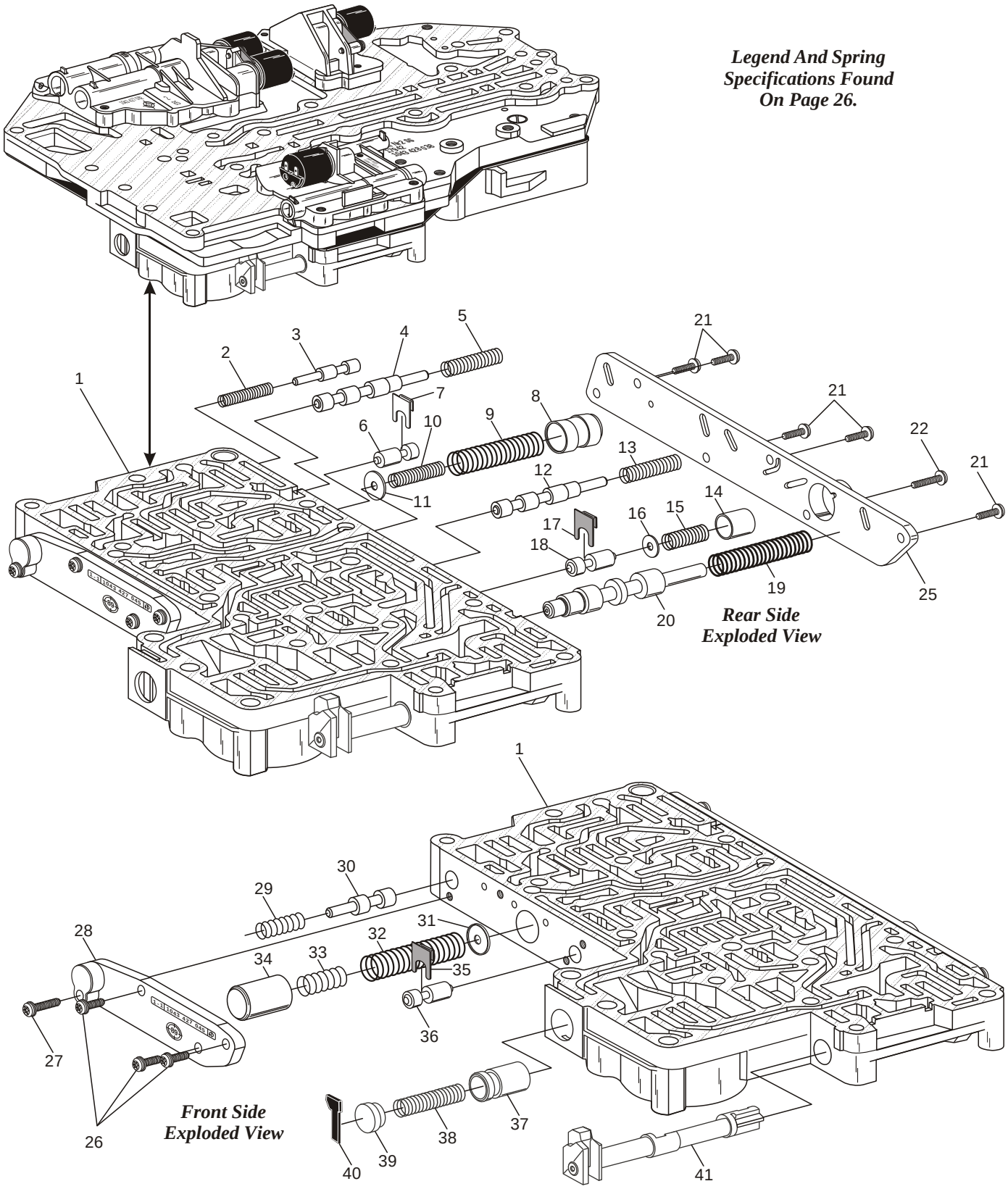

Copyright © 2003 ATSG

Figure 22

FIGURE 22 LEGEND AND SPRING SPECIFICATIONS

1 LOWER FRONT VALVE BODY CASTING
2 "C' " CLUTCH VALVE SPRING
3 "C' " CLUTCH VALVE
4 2-3 SHIFT VALVE
5 2-3 SHIFT VALVE SPRING
6 "C" CLUTCH VALVE
7 "C" CLUTCH VALVE RETAINER
8 "B" CLUTCH DAMPER PISTON
9 "B" CLUTCH DAMPER PISTON OUTER SPRING
10 "B" CLUTCH DAMPER PISTON INNER SPRING
11 "B" CLUTCH DAMPER PISTON SPRING SEAT
12 1-2 SHIFT VALVE
13 1-2 SHIFT VALVE SPRING
14 "D" CLUTCH DAMPER PISTON
15 "D" CLUTCH DAMPER PISTON SPRING
16 "D" CLUTCH DAMPER PISTON SPRING SEAT
17 "D" CLUTCH VALVE RETAINER
18 "D" CLUTCH VALVE
19 PRESSURE REGUL ATOR VALVE SPRING
20 PRESSURE REGUL ATOR VALVE
21 REAR SIDE COVER RETAINING BOLT, 17 mm LENGTH (5)
22 REAR SIDE COVER RETAINING BOLT, 24 mm LENGTH (1)
25 REAR SIDE COVER
26 FRONT SIDE COVER RETAINING BOLT, 17 mm LENGTH (3)
27 FRONT SIDE COVER RETAINING BOLT, 29 mm LENGTH (1)
28 FRONT SIDE COVER
29 TORQUE CONVERTER LOCK-UP VALVE SPRING
30 TORQUE CONVERTER LOCK-UP VALVE
31 "C" CLUTCH DAMPER PISTON SPRING SEAT
32 "C" CLUTCH DAMPER PISTON OUTER SPRING
33 "C" CLUTCH DAMPER PISTON INNER SPRING
34 "C" CLUTCH DAMPER PISTON
35 "B" CLUTCH REGULATOR VALVE RETAINER
36 "B" CLUTCH REGULATOR VALVE
37 "A" CLUTCH DAMPER PISTON
38 "A" CLUTCH DAMPER SPRING
39 "A" CLUTCH DAMPER PISTON SPRING SEAT
40 "A" CLUTCH DAMPER SPRING SEAT RETAINER
41 MANUAL SHIFT VALVE

SPRING ILLUSTRATION NO. 2:
FREE LENGTH = 1.075"
SPRING DIAMETER = .280"
WIRE DIAMETER = .033"

SPRING ILLUSTRATION NO. 5:
FREE LENGTH = 1.925"
SPRING DIAMETER = .363"
WIRE DIAMETER = .033"

SPRING ILLUSTRATION NO. 9:
FREE LENGTH = 2.900"
SPRING DIAMETER = .594"
WIRE DIAMETER = .040"

SPRING ILLUSTRATION NO. 10:
FREE LENGTH = 1.580"
SPRING DIAMETER = .432"
WIRE DIAMETER = .040"

SPRING ILLUSTRATION NO. 13:
FREE LENGTH = 1.880"
SPRING DIAMETER = .367"
WIRE DIAMETER = .032"

SPRING ILLUSTRATION NO. 15:
FREE LENGTH = 1.655"
SPRING DIAMETER = .560"
WIRE DIAMETER = .045"

SPRING ILLUSTRATION NO. 19:
FREE LENGTH = 3.625"
SPRING DIAMETER = .600"
WIRE DIAMETER = .080"

SPRING ILLUSTRATION NO. 29:
FREE LENGTH = 1.690"
SPRING DIAMETER = .443"
WIRE DIAMETER = .032"

SPRING ILLUSTRATION NO. 32:
FREE LENGTH = 3.310"
SPRING DIAMETER = .585"
WIRE DIAMETER = .045"

SPRING ILLUSTRATION NO. 33:
FREE LENGTH = 1.590"
SPRING DIAMETER = .442"
WIRE DIAMETER = .032"

SPRING ILLUSTRATION NO. 38:
FREE LENGTH = 2.727"
SPRING DIAMETER = .400"
WIRE DIAMETER = .050"

Figure 22 Legend

Copyright © 2003 ATSG

ZF-4HP-22/24 MODEL "E-9", "4 SOLENOID"
LOWER "REAR" VALVE BODY

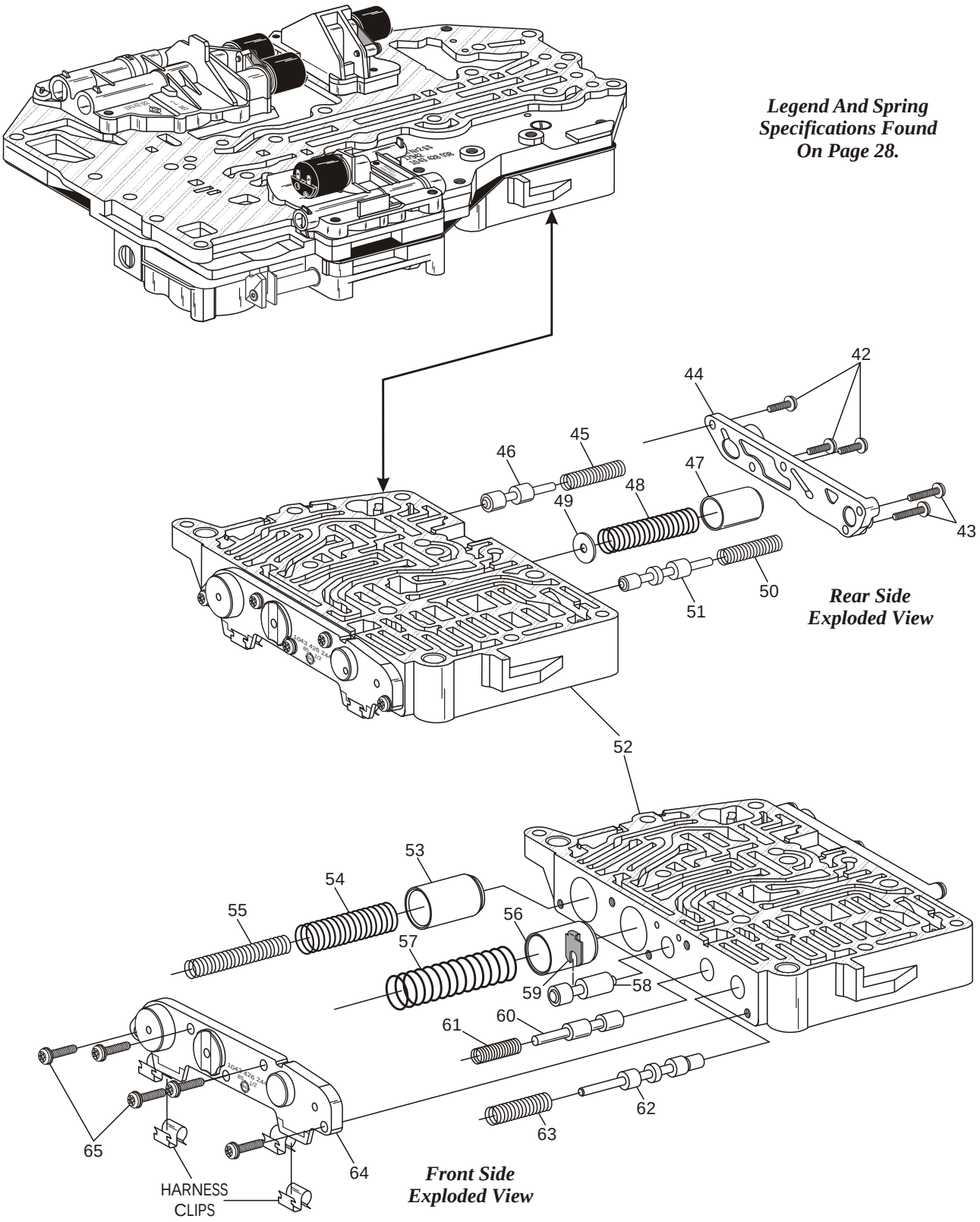

Legend And Spring Specifications Found On Page 28.

Rear Side Exploded View

Front Side Exploded View

Copyright © 2003 ATSG

Figure 23

FIGURE 23 LEGEND AND SPRING SPECIFICATIONS

42 REAR SIDE COVER RETAINING BOLTS, 17 mm LENGTH (3)
43 REAR SIDE COVER RETAINING BOLTS, 21 mm LENGTH (2)
44 REAR SIDE COVER
45 PRESSURE REDUCING VALVE "1" SPRING
46 PRESSURE REDUCING VALVE "1"
47 "F" CLUTCH DAMPER PISTON
48 "F" CLUTCH DAMPER PISTON SPRING
49 "F" CLUTCH DAMPER PISTON SPRING SEAT
50 SAFETY VALVE SPRING
51 SAFETY VALVE
52 LOWER REAR VALVE BODY CASTING
53 "C' " CLUTCH DAMPER PISTON
54 "C' " CLUTCH DAMPER PISTON OUTER SPRING
55 "C' " CLUTCH DAMPER PISTON INNER SPRING
56 "E" CLUTCH DAMPER PISTON
57 "E" CLUTCH DAMPER PISTON SPRING
58 "F" CLUTCH VALVE
59 "F" CLUTCH VALVE RETAINER
60 PRESSURE REDUCING VALVE "2"
61 PRESSURE REDUCING VALVE "2" SPRING
62 3-4 SHIFT VALVE
63 3-4 SHIFT VALVE SPRING
64 FRONT SIDE COVER
65 FRONT SIDE COVER RETAINING BOLTS, 17 mm LENGTH (5)

SPRING ILLUSTRATION NO. 45:
FREE LENGTH = 1.395"
SPRING DIAMETER = .305"
WIRE DIAMETER = .040"

SPRING ILLUSTRATION NO. 48:
FREE LENGTH = 3.160"
SPRING DIAMETER = .690"
WIRE DIAMETER = .044"

SPRING ILLUSTRATION NO. 50:
FREE LENGTH = 1.267"
SPRING DIAMETER = .315"
WIRE DIAMETER = .025"

SPRING ILLUSTRATION NO. 54:
FREE LENGTH = 2.900"
SPRING DIAMETER = .603"
WIRE DIAMETER = .065"

SPRING ILLUSTRATION NO. 55:
FREE LENGTH = 3.490"
SPRING DIAMETER = .408"
WIRE DIAMETER = .045"

SPRING ILLUSTRATION NO. 57:
FREE LENGTH = 2.905"
SPRING DIAMETER = .614"
WIRE DIAMETER = .065"

SPRING ILLUSTRATION NO. 61:
FREE LENGTH = 1.515"
SPRING DIAMETER = .339"
WIRE DIAMETER = .045"

SPRING ILLUSTRATION NO. 63:
FREE LENGTH = 1.595"
SPRING DIAMETER = .67"
WIRE DIAMETER = .032"

Copyright © 2003 ATSG

Figure 23 Legend

Copyright © 2003 ATSG

ZF-4HP-22/24 MODEL "E-9", "4 SOLENOID"
MV-5 SOLENOID BODY

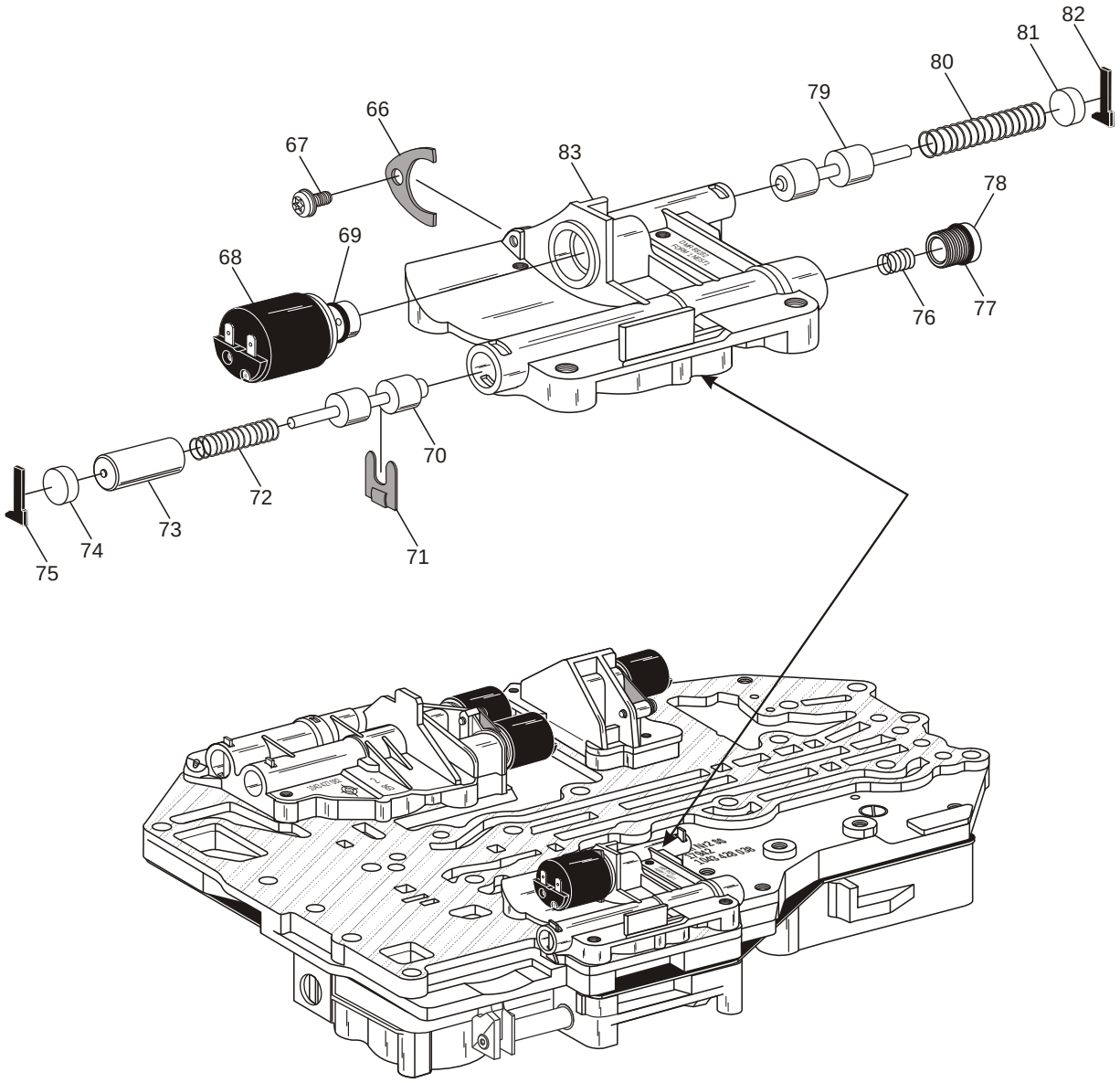

66 SOLENOID RETAINING BRACKET
67 SOLENOID RETAINING BOLT, 11 mm LENGTH
68 MV-5 LINE PRESSURE SOLENOID ASSEMBLY
69 MV-5 LINE PRESSURE SOLENOID "O" RING
70 MODULATION VALVE
71 MODULATION VALVE RETAINER
72 MODULATION VALVE SPRING
73 MODULATION VALVE SPRING SLEEVE
74 MODULATION VALVE BORE PLUG
75 MODULATION VALVE BORE PLUG RETAINER
76 MODULATION VALVE BALANCE SPRING
77 MODULATION VALVE ADJUSTING PLUG "O" RING
78 MODULATION VALVE ADJUSTING PLUG
79 REVERSE LOCKOUT VALVE
80 REVERSE LOCKOUT VALVE SPRING
81 REVERSE LOCKOUT VALVE BORE PLUG
82 REVERSE LOCKOUT VALVE BORE PLUG RETAINER
83 MV-5 SOLENOID BODY CASTING

SPRING ILLUSTRATION NO. 72:
FREE LENGTH = 1.245"
SPRING DIAMETER = .302"
WIRE DIAMETER = .039"

SPRING ILLUSTRATION NO. 76:
FREE LENGTH = .770"
SPRING DIAMETER = .377"
WIRE DIAMETER = .027"

SPRING ILLUSTRATION NO. 80:
FREE LENGTH = 1.835"
SPRING DIAMETER = .380"
WIRE DIAMETER = .035"

Copyright © 2003 ATSG

Figure 24

ZF-4HP-22/24 MODEL "E-9", "4 SOLENOID"
MV-1 AND MV-2 SOLENOID BODY

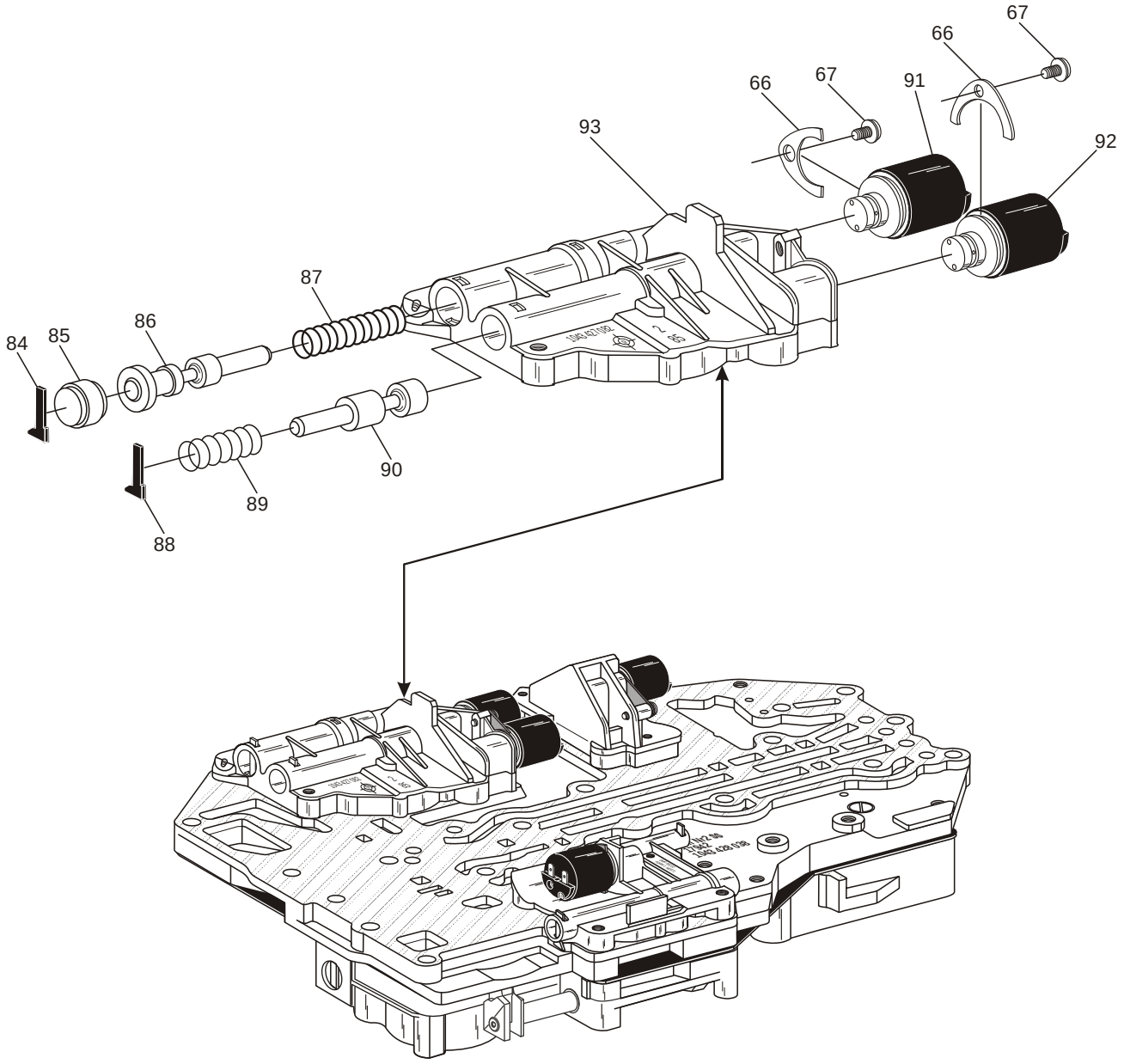

66 SOLENOID RETAINING BRACKET
67 SOLENOID RETAINING BOLT, 11 mm LENGTH
84 T.C.C. VALVE BORE PLUG RETAINER
85 T.C.C. VALVE BORE PLUG
86 TORQUE CONVERTER CLUTCH VALVE
87 TORQUE CONVERTER CLUTCH VALVE SPRING
88 LUBRICATION VALVE SPRING RETAINER
89 LUBRICATION VALVE SPRING
90 LUBRICATION VALVE
91 MV-2 SHIFT SOLENOID ASSEMBLY
92 MV-1 SHIFT SOLENOID ASSEMBLY
93 SHIFT SOLENOID BODY CASTING

SPRING ILLUSTRATION NO. 87:
FREE LENGTH = 1.570"
SPRING DIAMETER = .430"
WIRE DIAMETER = .039"

SPRING ILLUSTRATION NO. 89:
FREE LENGTH = 1.545"
SPRING DIAMETER = .440"
WIRE DIAMETER = .031"

Copyright © 2003 ATSG

Figure 25

ZF-4HP-22/24 MODEL "E-9", "4 SOLENOID"
MV-3 SOLENOID BODY

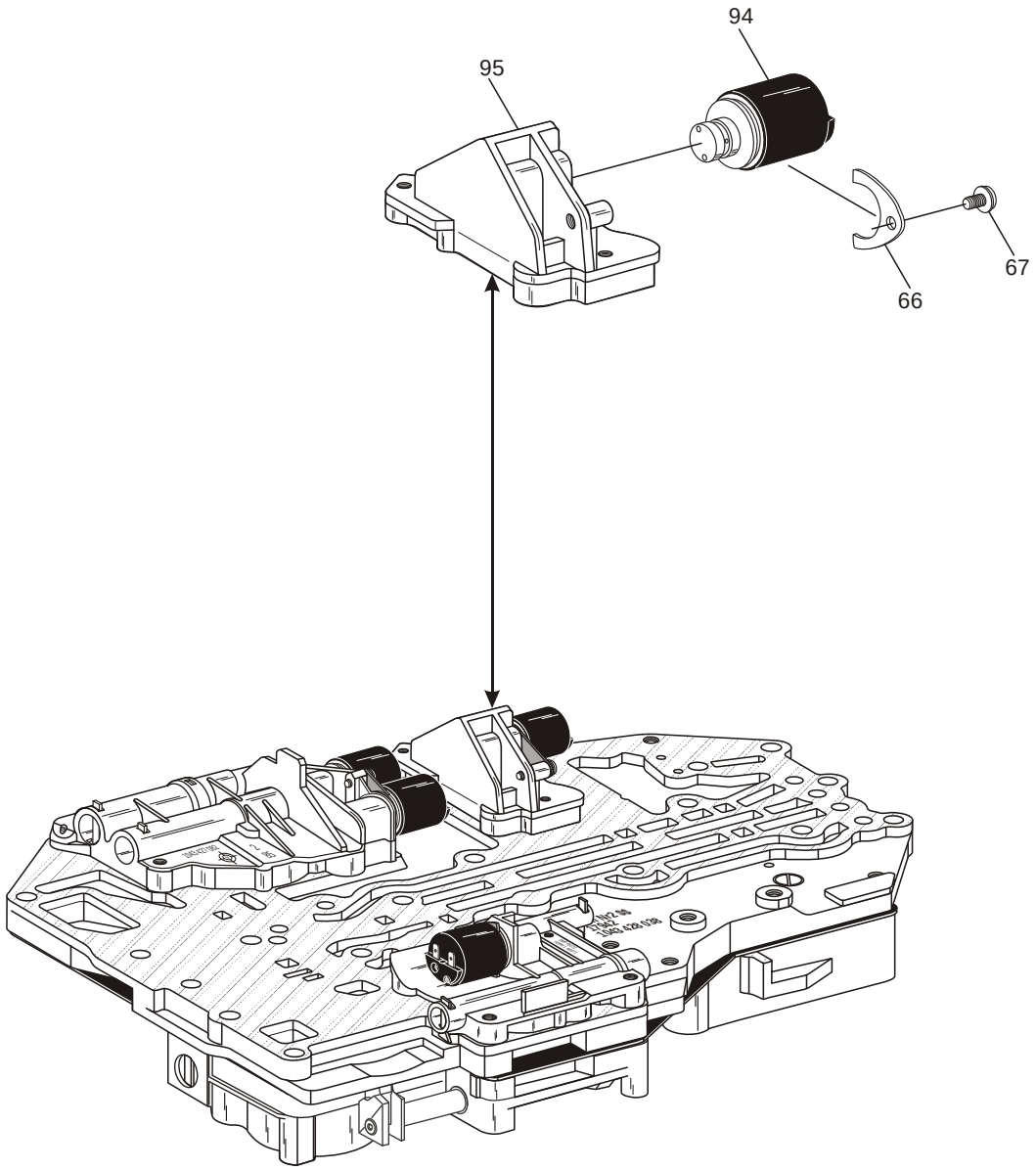

66 SOLENOID RETAINING BRACKET
67 SOLENOID RETAINING BOLT, 11 mm LENGTH
94 MV-3 LOCK-UP SOLENOID ASSEMBLY
95 MV-3 SOLENOID BODY CASTING

Copyright © 2003 ATSG

Figure 26

ZF-4HP-22/24 MODEL "E-9", "4 SOLENOID"
LOWER "FRONT" VALVE BODY

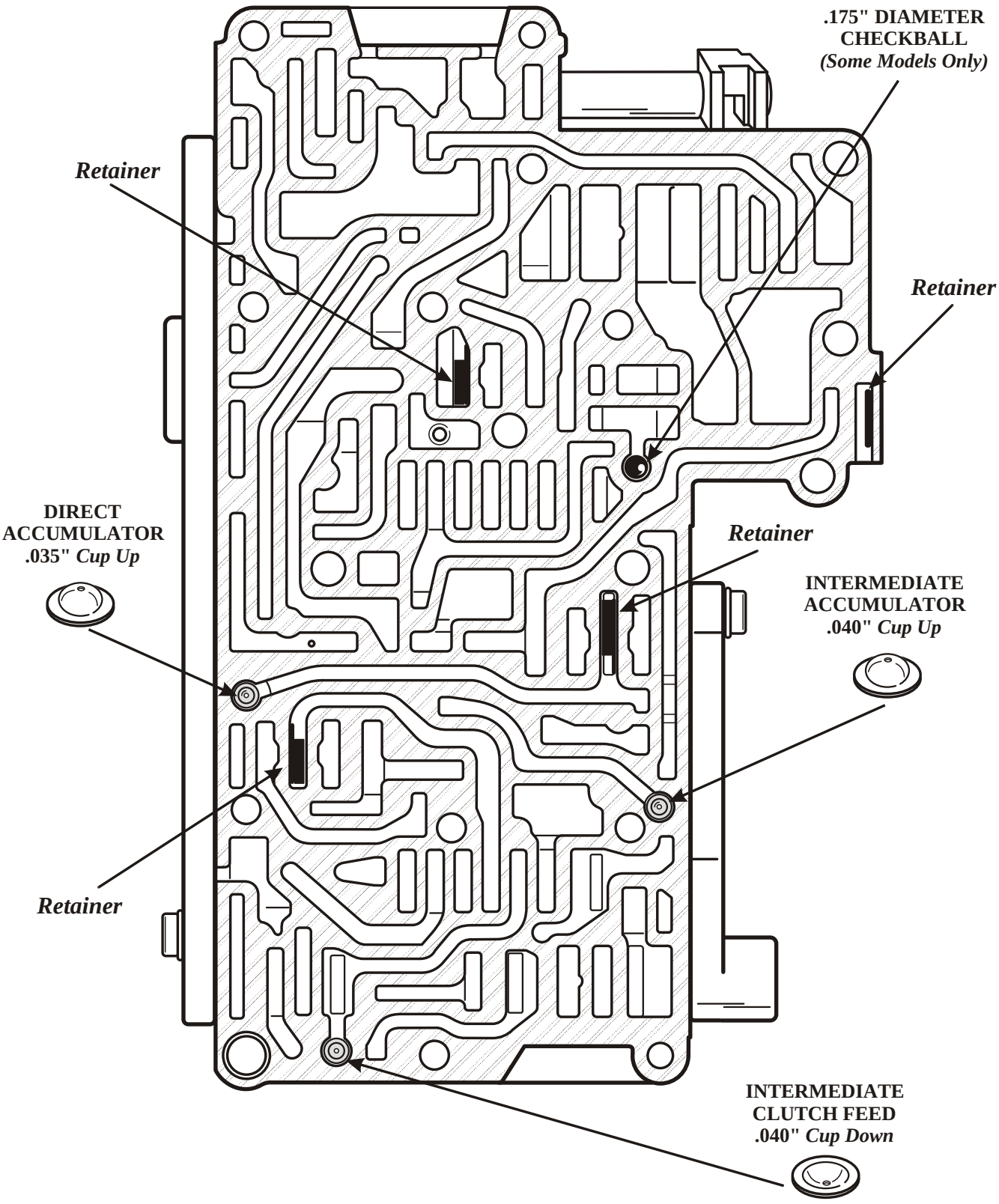

Copyright © 2003 ATSG

Figure 27

ZF-4HP-22/24 MODEL "E-9", "4 SOLENOID"
LOWER "REAR" VALVE BODY

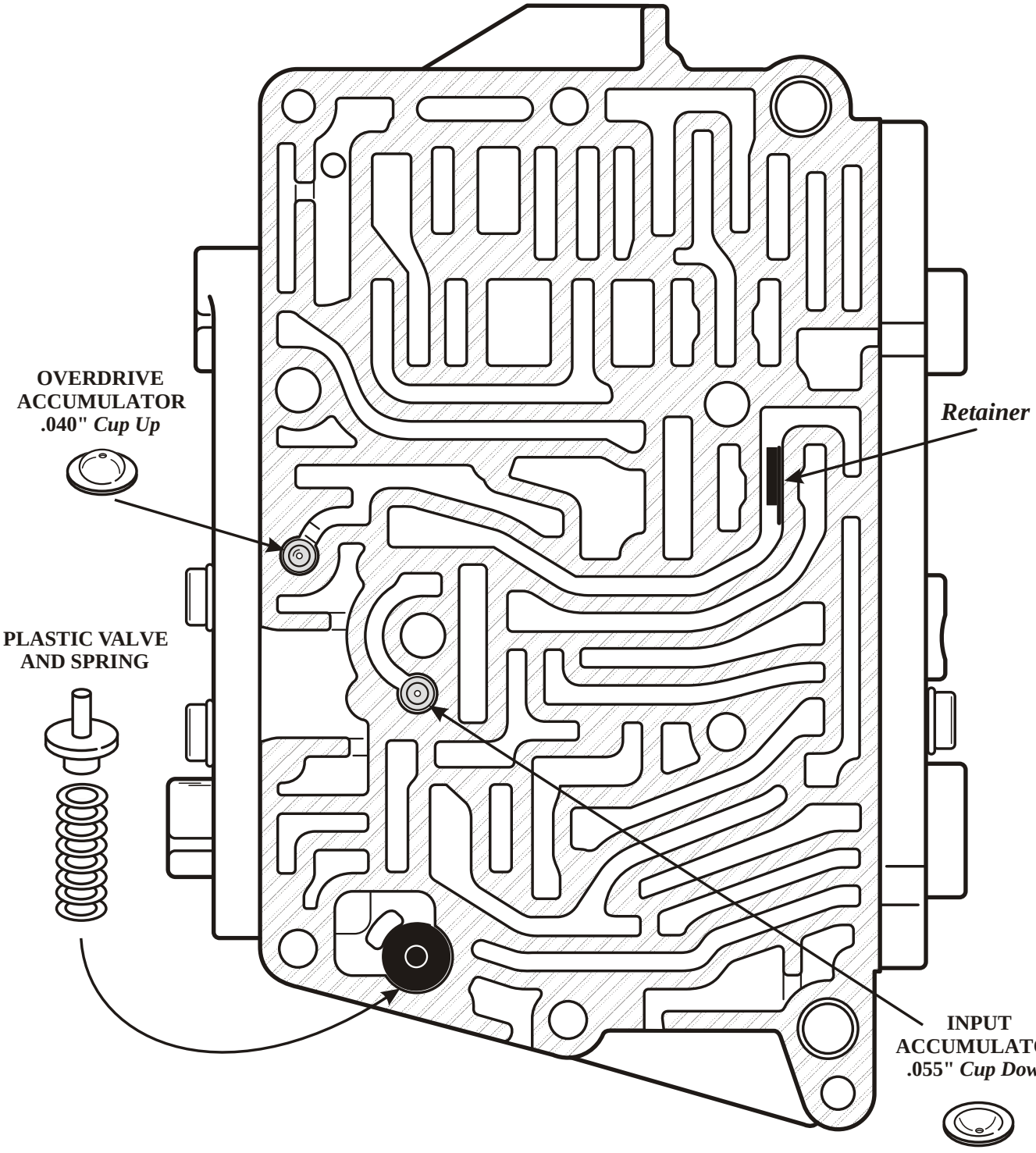

Copyright © 2003 ATSG

Figure 28

ZF-4HP-22/24 MODEL "E-9", "4 SOLENOID"
CHANNEL PLATE

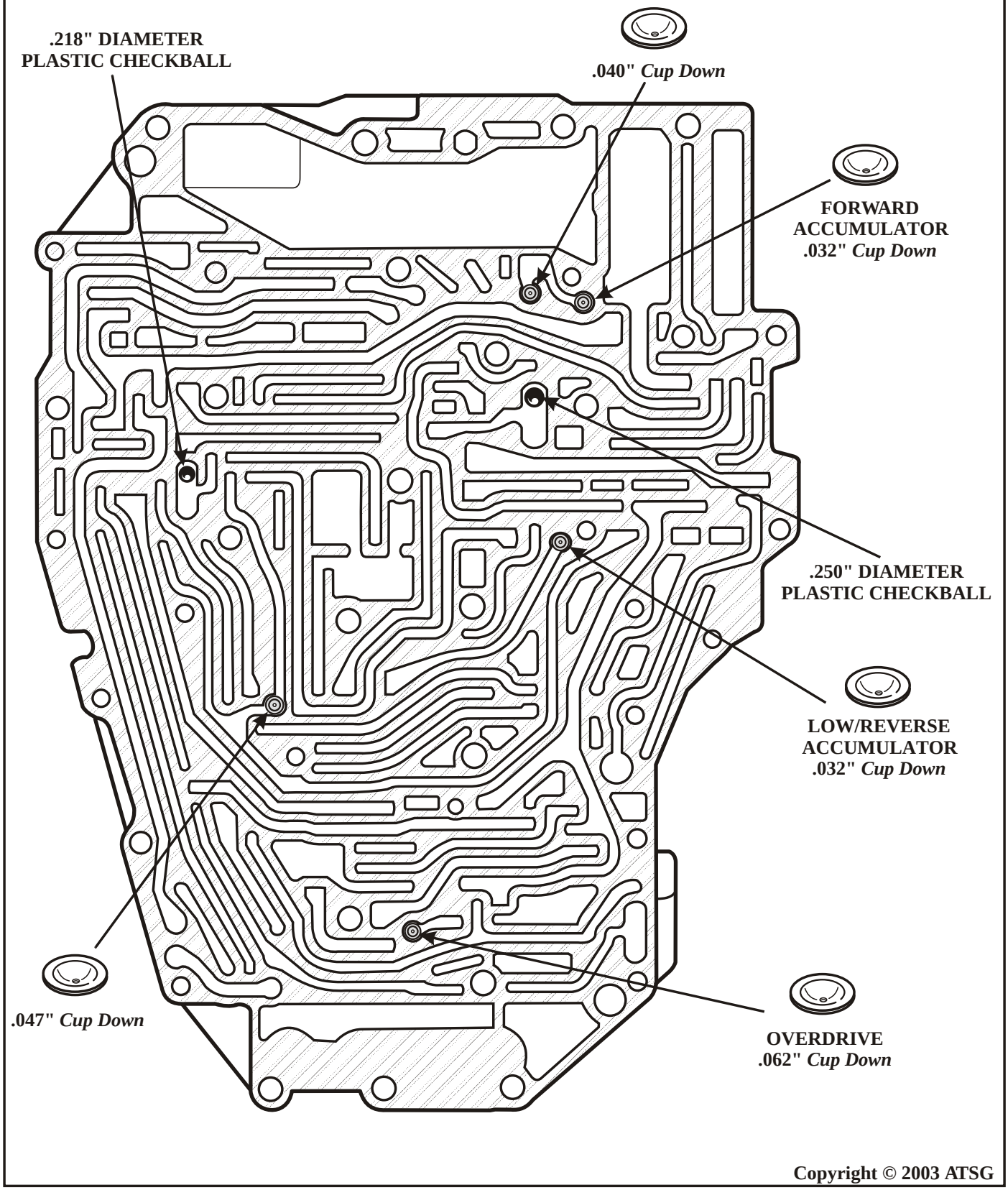

Copyright © 2003 ATSG

Figure 29

ZF-4HP-22/24 MODEL "E-9", "4 SOLENOID"
ALL SOLENOID BODIES

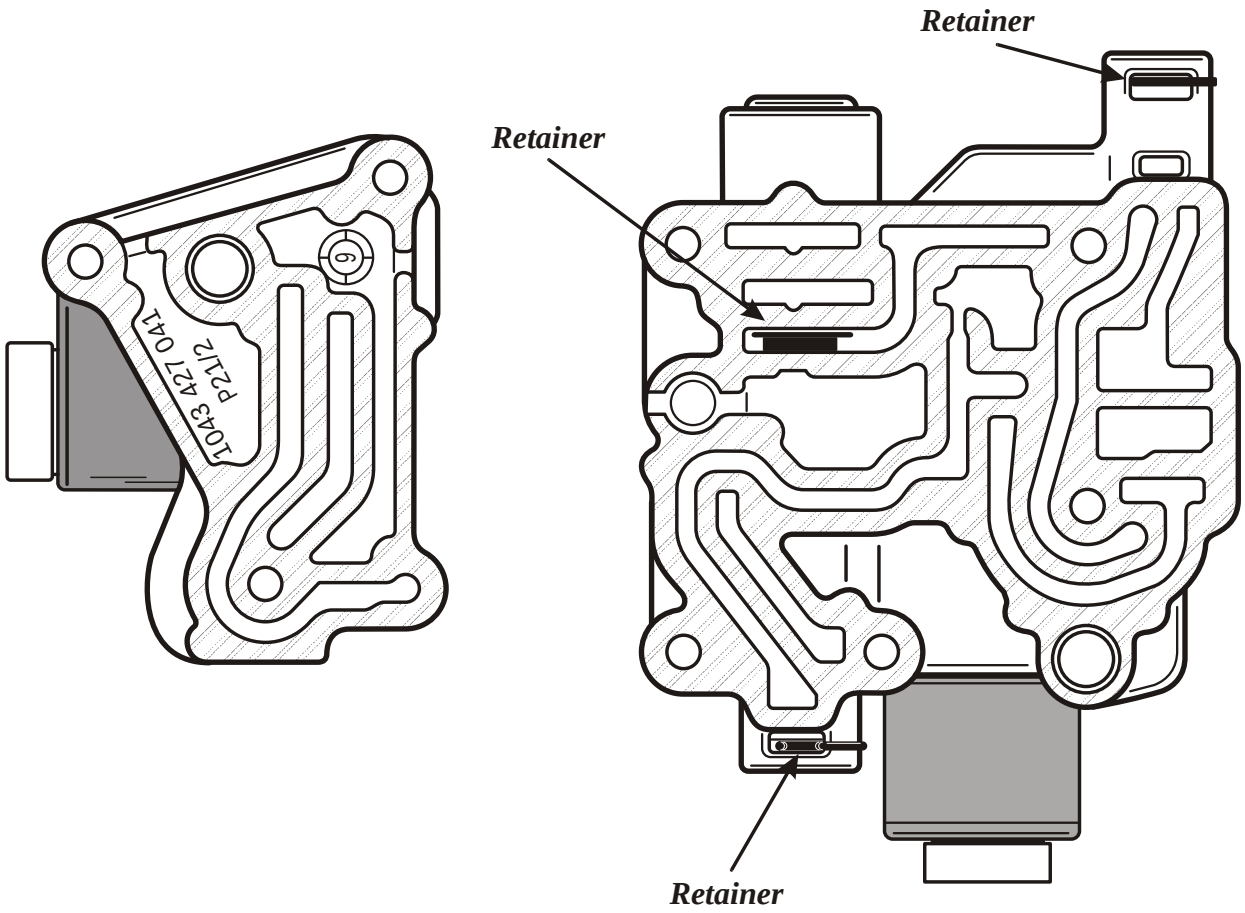

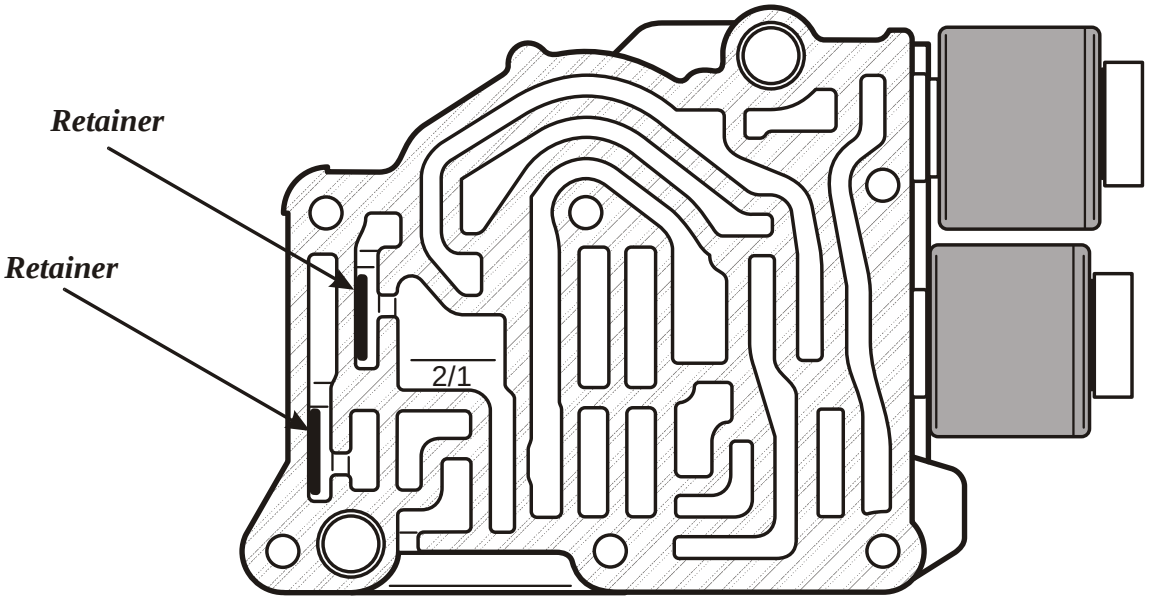

Copyright © 2003 ATSG

Figure 30